REV.	ECN NO OR DESCRIPTION	REVISED	DATE
A	PDR NO.:T130726-3A	Shawn	2013.08.19

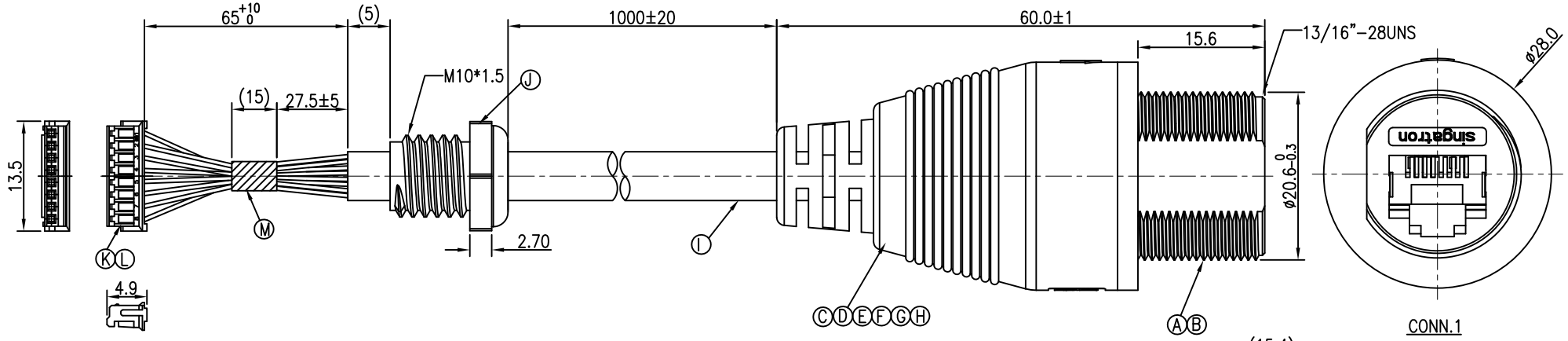

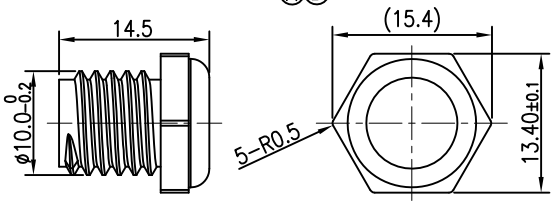

NOTES:
1. ELECTRICAL CHARACTERISTICS:
   1-1 CURRENT RATING: 1.5 AMPS
   1-2 CONTACT RESISTANCE: 3 Ohm Max.
   1-3 INSULATION RESISTANCE: 30 MOhm Min. at 300VDC.
   1-4 BREAKDOWN VOLTAGE: 300 VAC PER MINUTE.
2. ENVIRONMENTAL:
   3-1 OPERATING TEMPERATURE: -20°C TO +80°C.
   3-2 SEALING REQUIREMENTS: IP67.
3. OTHER GENERAL SPEC. TO REFER "RJ45 SERIES SPEC".
4. FOR TECHNICAL DATA REFER TO YOUR LOCAL SINGATRON ELECTRONICS SALES OFFICE.
5. ALL DIMENSIONS ARE NOMINAL FOR REFERENCE ONLY UNLESS OTHERWISE STATED.
6. TO CONFORM TO SINGATRON HAZARDOUS SUBSTANCE FREE SPEC.
7. GREEN PRODUCT IDENTIFICATION LABEL ON PACKAGING: G.P. PASS.

	DRAIN	SHIELD	
3	BROWN	8	TWIST
4	BROWN/WHITE	7	
1	GREEN	6	TWIST
5	BLUE/WHITE	5	TWIST
6	BLUE	4	
2	GREEN/WHITE	3	
7	ORANGE	2	TWIST
8	ORANGE/WHITE	1	
CONN.2	WIRE COLOR	CONN.1	

PIN OUT

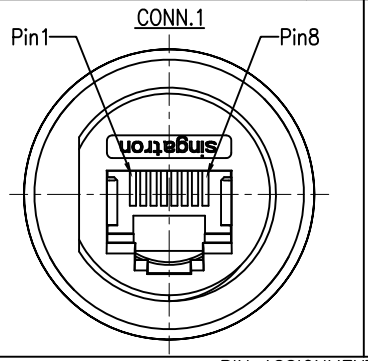

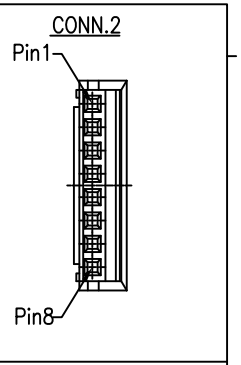

PIN ASSIGNMENTS
FRONT VIEW

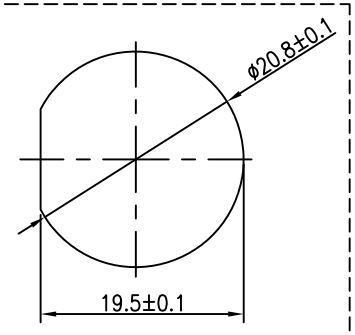

RECOMMENDED PANEL CUT-OUT

NO	DESCRIPTION	QTY	MATERIAL	PLATING & COLOR
M	HEAT SHRINK TUBE	1	ø4.0 L=15mm 300V	RED
L	TERMINAL	8	Phosphor Bronze	TIN PLATED
K	HOUSING	1	NYLON 66	WHITE
J	SR	1	ABS	BLACK
I	CABEL	1	UL2835 4P*26AWG+AL+D +B CAT.5E OD=6.0 UV	BLACK(PVC JACKET)
H	OVER MOLD	1	TPU	BLACK
G	INNER MOLD	1	PVC	BLACK
F	LIQUID GLUE	1	N/A	BLACK
E	UV GLUE	1	N/A	NATURAL
D	HEAT SHRINK TUBE	1	ø1.0 L=15mm 300V	BLACK
C	SCREW	1	SUS 304	NATURAL
B	RJ45+PCB	1	N/A	N/A
A	HOUSING	1	PA66+GF	BLACK

UNLESS OTHERWISE SPECIFED TOLERANCES

Singatron Enterprise Co., Ltd.
信音企業股份有限公司

DECIMALS: X :±0.5, X.X :±0.3, X.XX :±0.2
ANGLES: X :±2°, X.X :±1°

TITLE	WATERPROOF RJ45 CAT.5E STP JACK		
DWN	Shawn	PART NO.2TJ3005-W05104H	
CHKD	Harlen	SCALE 2:1	UNIT: mm
APVD	Quan	SIZE: A3	SHEET:1 OF 1 REV: A

CUSTOMER COPY

文件編號 RD-06-043-A