REV.	ECN NO OR DESCRIPTION	REVISED	DATE
A	PDR RELEASE	IVY-C	2012.07.10
A1	ECN NO:L120154	IVY-C	2012.10.02

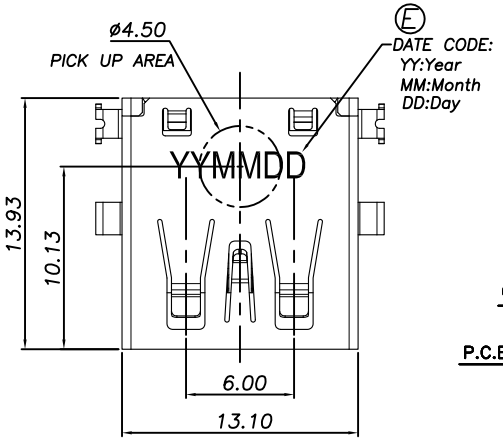

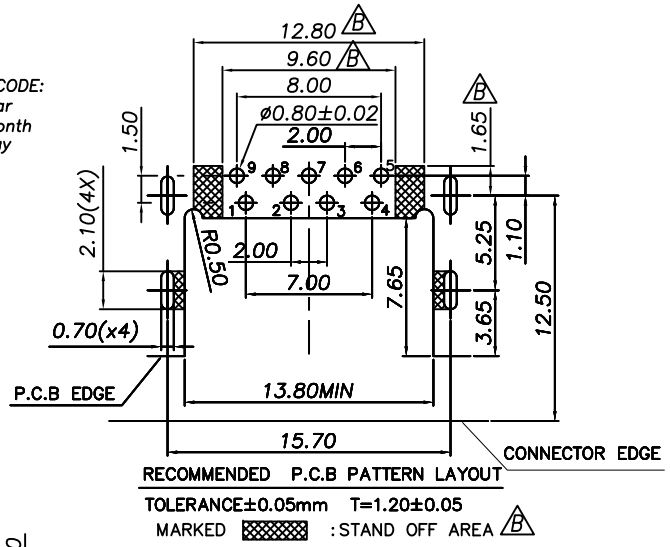

SPECIFICATIONS:

1. ELECTRICAL CHARACTERISTICS:
   1-1. CURRENT RATING: 1.8A (PIN1,4), THE OTHER CONTACTS 0.25A MIN.
   1-2. CONTACT RESISTANCE: 30mΩ MAX.
   1-3. INSULATION RESISTANCE: 100MΩ MIN. @500V DC.
   1-4. DIELECTRIC WITHSTANDING VOLTAGE: 100V AC FOR 1 MINUTE.
2. MECHANICAL CHARACTERISTICS:
   2-1. INSERTION FORCE: 35N MAX.
   2-2. WITHDRAWAL FORCE: 10N MIN. FOR INITIAL, AND 8N MIN. AFTER TEST.
3. LIFE TEST: 5,000 CYCLES.
4. TEMPERATURE RANGE: -25°C TO +85°C.
5. OTHER GENERAL SPEC. TO REFER "2UB1585 SERIES SPEC".
6. TO CONFORM TO THE SINGATRON HAZARDOUS SUBSTANCE FREE SPEC.
7. HALOGEN FREE PRODUCT IDENTIFICATION LABEL ON PACKAGING:
8. PACKAGE: SEE "2UB1585 SERIES" PACKAGE.
9. FOR REFLOW SOLDERING LEAD-FREE PROCESS.

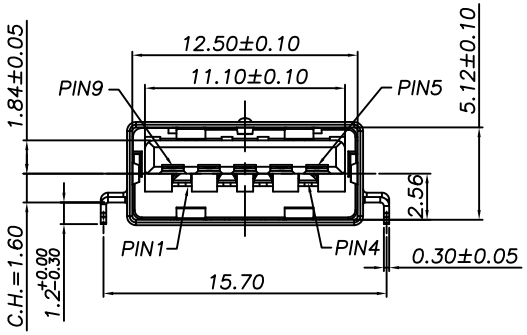

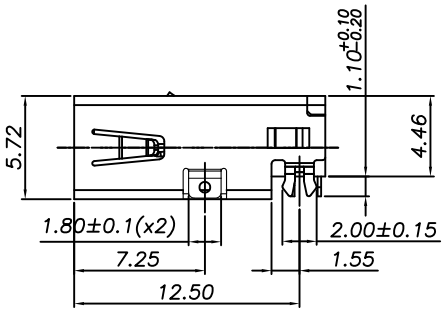

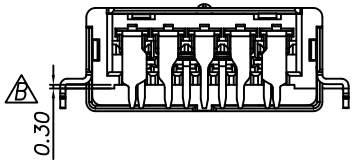

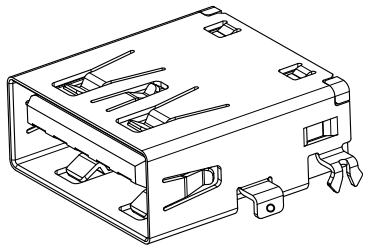

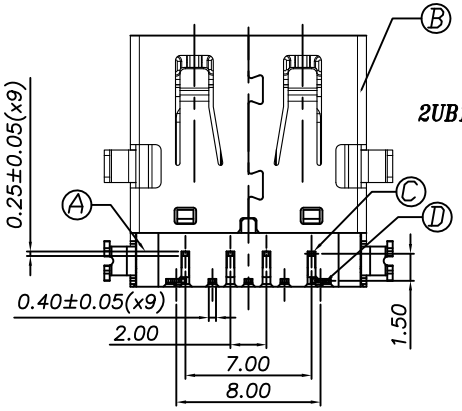

2UB1585-000121F

- SUFFIX: HALOGEN FREE
- PACKAGE
  1: TAPE & REEL
- HOUSING COLOR
  2: BLACK
- CONTACT PLATING
  1: 2u"Min. Au AND 30u"Min. Pd/Ni ON CONTACT AREA, 100u"Min. MATTE TIN(Sn) PLATING ON SOLDER AREA, 50u"Min. Ni UNDERPLATING OVERALL

NO	DESCRIPTION	QTY	MATERIAL	PLATING & COLOR
E	INK			BLACK
D	CONTACT (3.0)	5	COPPER ALLOY	SEE PART NO.
C	CONTACT (2.0)	4	COPPER ALLOY	SEE PART NO.
B	SHELL	1	STAINLESS STEEL	50u"Min. Ni PLATED
A	HOUSING	1	HIGH-TEMP THERMO-PLASTIC, UL 94V-0	SEE PART NO.

UNLESS OTHERWISE SPECIFIED TOLERANCES

DECIMALS: X :±0.5, X.X :±0.3, X.XX :±0.2
ANGLES: X :±2°, X.X :±1°

Singatron Enterprise Co., Ltd.
信音企業股份有限公司

TITLE	USB3.0 A TYPE FEMALE, DIP, SINKING,CH=1.60mm		
DWN	IVY-C 2012.11.26	PART NO. 2UB1585-000121F	
CHKD	DMD-T 2012.11.26	SCALE3.3:1	UNIT: mm
APVD	DMD-T 2012.11.26	SIZE: A3	SHEET:1 OF 1 REV: B

CUSTOMER COPY

文件編號 RD-06-043-A