REV.	ECN NO OR DESCRIPTION	REVISED	DATE
A	PDR NO: T180208-1A/1B	wenrong	2019.04.24

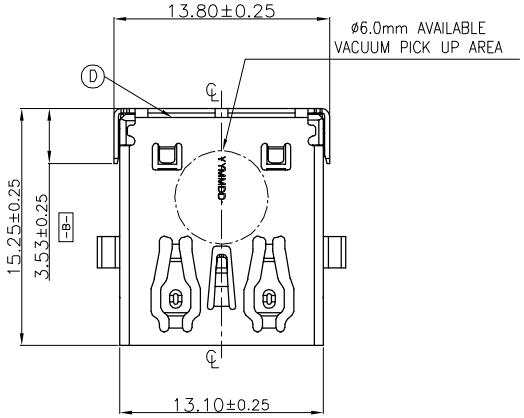

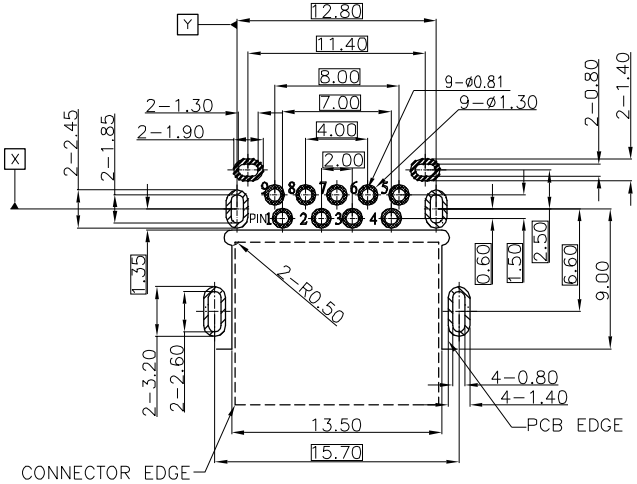

SPECIFICATIONS:

1. ELECTRICAL CHARACTERISTICS:
   1-1. CURRENT RATING: 1.8A (PIN1,4) ; OTHER CONTACTS 0.25A
   1-2. CONTACT RESISTANCE: 30mΩ MAX INITIAL FOR PIN 1-4.
   50mΩ MAX INITIAL FOR OTHER PIN.
   1-3. DIELECTRIC WITHSTANDING VOLTAGE: 100V AC FOR 1 MINUTE
   1-4. INSULATION RESISTANCE: 100MΩ MIN .
2. MECHANICAL CHARACTERISTICS:
   2-1. INSERTION FORCE : 3.5 Kgf MAX.
   2-2. WITHDRAWAL FORCE : 1.0 Kgf MIN(INITIAL),0.8 Kgf(AFTER TEST)
3. DURABILITY: 5,000 CYCLES.
4. TO CONFORM TO SINGATRON HAZARDOUS SUBSTANCE FREE SPEC.
5. HALOGEN FREE IDENTIFICATION MARK ON JACK:
6. HALOGEN FREE IDENTIFICATION LABEL ON PACKAGING:
7. FOR IR REFLOW PROCESS.
8. DATE : YYMMDD-
9. PACKAGING : TAPE & REEL

Recommended P.C.B Layout(TOP VIEW)
(THK:1.0mm) TOLERANCE=±0.03

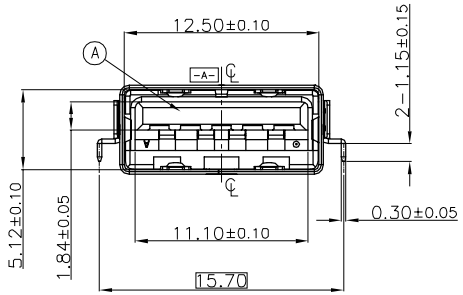

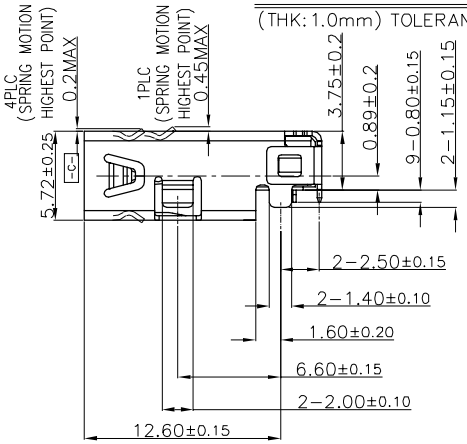

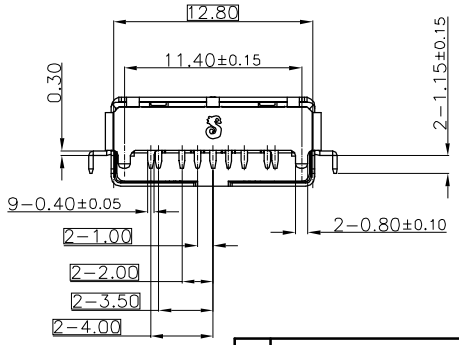

REMARK	Pin Number	Signal ASSIGNMENT
USB2.0 CONTACT PIN	PIN 1	VBUS
	PIN 2	D-
	PIN 3	D+
	PIN 4	GND
USB3.0 CONTACT PIN	PIN 5	StdA_SSRX-
	PIN 6	StdA_SSRX+
	PIN 7	GND_DRAIN
	PIN 8	StdA_SSTX-
	PIN 9	StdA_SSTX+

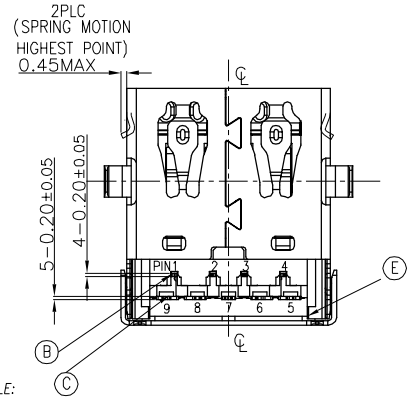

TABLE:

2UB3922-030101F	Au 30u"	T180208-1B
2UB3922-029101F	G/F	T180208-1A

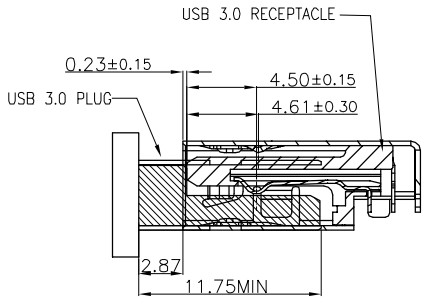

MATED SECTION

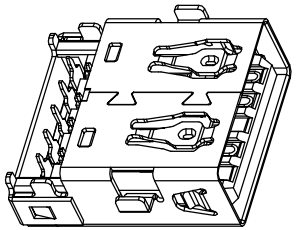

3D View

NO	DESCRIPTION	QTY	MATERIAL	PLATING & COLOR
D	SHELL	1	SUS304 1/2H, T=0.30	NICKEL 60uin MIN
C	5 PIN TERMINAL	5	C2680-H ,T=0.20	SEE TABLE PLATED ON CONTACT AREA; Matte Sn 120uin PLATED ON SOLDERING ALL OVER 80uin NICKET PLATING.
B	4 PIN TERMINAL	4	C5210-EH ,T=0.20	
A	BODY	1	PA-4T+30%GF(TX1)	BLACK

UNLESS OTHERWISE SPECIFED TOLERANCES

DECIMALS: X :±0.5, X.X :±0.3, X.XX :±0.2

ANGLES: X :±2°, X.X :±1°

Singatron Enterprise Co., Ltd.
信音企業股份有限公司

TITLE	USB 3.0 STD CONNECTOR			
DWN	wenrong	PART NO:2UB3922-0XX101F		
CHKD	JAMES	SCALE:4:1	UNIT: mm	
APVD	BOYE	SIZE: A3	SHEET:1 OF 1	REV:A

CUSTOMER COPY

文件編號: RD-06-043-A