REV.	ECN NO OR DESCRIPTION	REVISED	DATE
A	PRODUCTED RELEASED	Junkang	2014.09.23

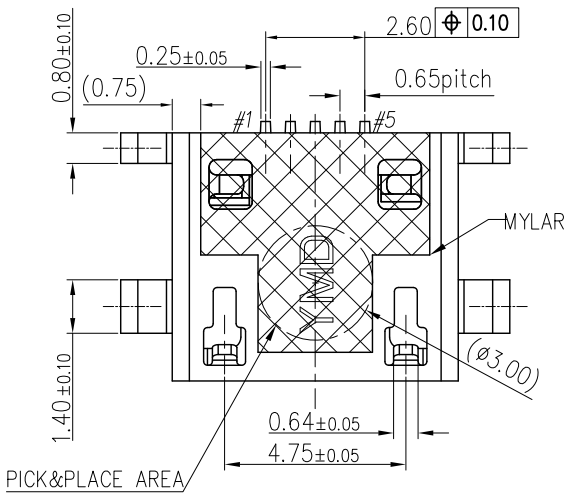

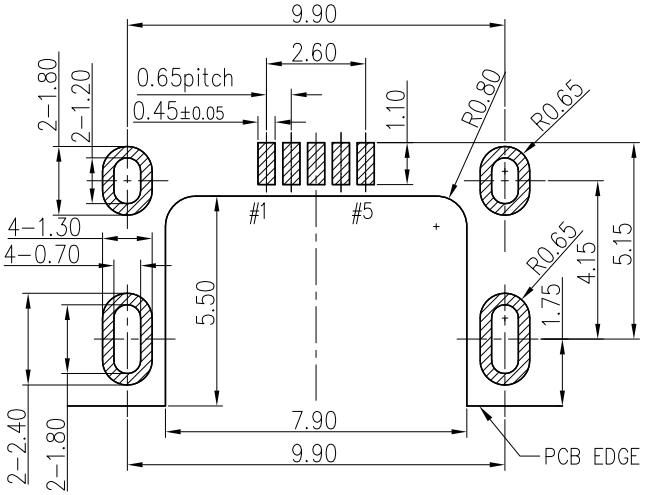

RECOMMENDED PCB LAYOUT T=0.60mm

TOP VIEW, TOL ±0.05

SPECIFICATIONS:

1. ELECTRICAL CHARACTERISTICS:
   1-1. RATING: 1.8A (PIN1/5), 0.5A (PIN2/3/4)
   1-2. CONTACT RESISTANCE: 30mΩ MAX.(Initial),50mΩ MAX.(Final).
   1-3. DIELECTRIC WITHSTANDING VOLTAGE: 100V AC FOR ONE MINUTE.
   1-4. INSULATION RESISTANCE: 100MΩ MIN.(Finish). MEASURED BY 500V DC.
2. MECHANICAL CHARACTERISTICS:
   2-1. INSERTION FORCE : 3.6 KGF (MAX.).
   2-2. WITHDRAWAL FORCE : 0.8 KGF(Reference).
3. LIFE TEST: 10,000 CYCLES.
4. TO CONFORM TO THE SINGATRON HSF SPEC.
5. OTHER GENERAL SPEC TO REFER "2UB2139-006111F SPEC".
6. HALOGEN FREE PRODUCT IDENTIFICATION MARK ON PRODUCT:
7. HALOGEN FREE PRODUCT IDENTIFICATION LABEL ON PACKAGING:
8. FOR REFLOW SOLDERING LEAD-FREE PROCESS.
9. PLUG INTERFACE DIMENSIONS COMFORM TO USB2.0 SPEC.
10. PACKAGING: TAPE & REEL.

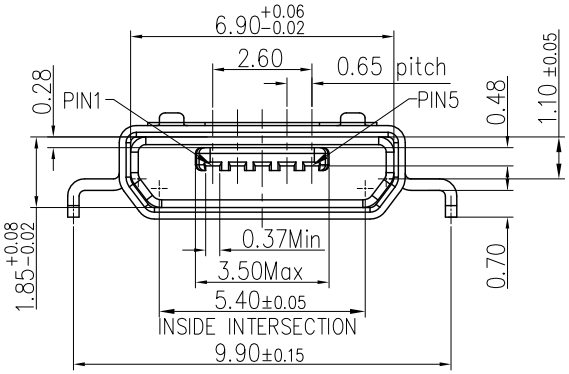

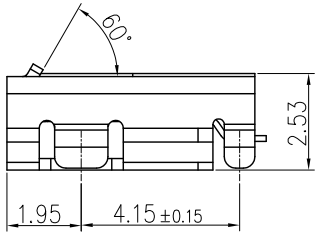

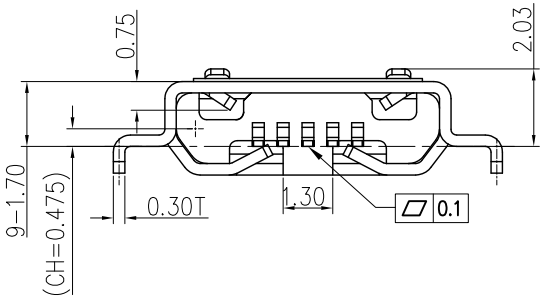

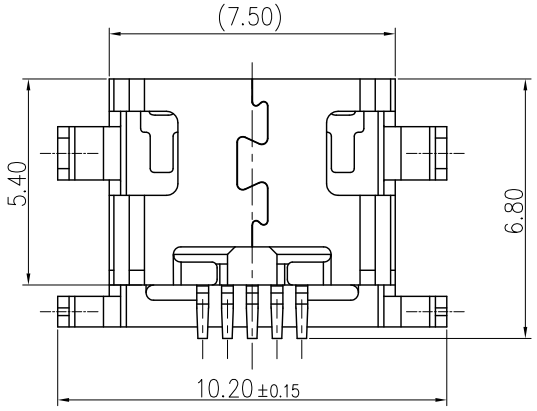

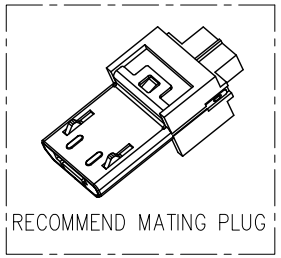

RECOMMEND MATING PLUG

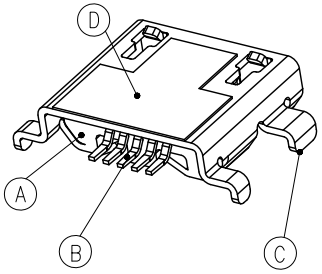

NO	DESCRIPTION	QTY	MATERIAL	PLATING & COLOR
D	MYLAR	1	Mylar 0.075T	
C	SHELL	1	SUS 301 1/2H 0.30T	G/F on Solder Tail, Ni 60u"MIN. under plated
B	CONTACT	5	C2680-H 0.15T	Au30u"MIN. on Contact Area And Au 1u" MIN. on Solder Area,Ni80u" MIN. under plated
A	BODY	1	LCP+30%GF E130i UL94V-0	BLACK

UNLESS OTHERWISE SPECIFED TOLERANCES

DECIMALS: X :±0.50, X.X :±0.30, X.XX :±0.20

ANGLES: X :±2°, X.X :±1°

Singatron Enterprise Co., Ltd.
信音企業股份有限公司

TITLE	MICRO USB B TYPE RECEPTACLE		
DWN	ZJK 14/9/25	PART NO. 2UB2139-006111F	
CHKD	HOC 14/9/25	SCALE 5:1	UNIT: mm
APVD	ZJZ 14/9/25	SIZE: A3	SHEET:1 OF 1 REV:A

CUSTOMER COPY

文件編號RD-06-043-A