REV.	ECN NO OR DESCRIPTION	REVISED	DATE
A	PRODUCT RELEASE	WANG-TANG	2015.07.29
B	ECN NO:S171032-C	He	2017.11.13

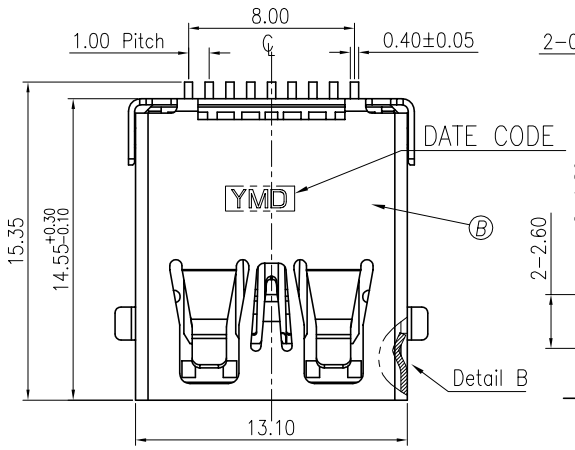

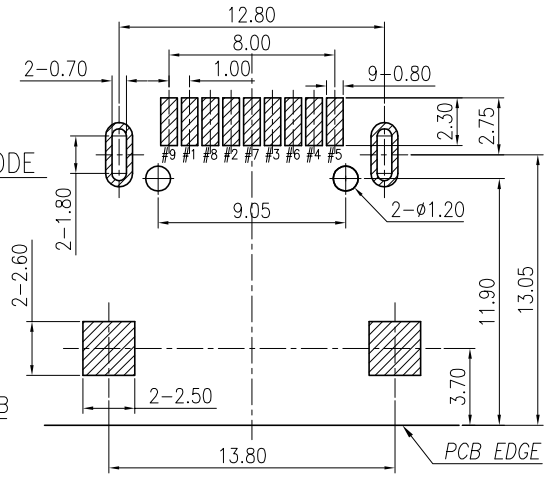

Recommended P.C.B Layout (THK:1.2mm)

Top View (Tol:±0.05)

SPECIFICATIONS:

1. ELECTRICAL CHARACTERISTICS:
   1-1. CURRENT RATING: 1.8A (PIN1,4) ; OTHER CONTACTS 0.25A
   WORKING RATED VOLTAGE:30V AC
   1-2. CONTACT RESISTANCE: 30 mΩ MAX.(INITIAL) FOR VBUS/ GND CONTACTS
   50 mΩ MAX.(INITIAL) FOR ALL OTHER CONTACTS.
   1-3. DIELECTRIC WITHSTANDING VOLTAGE: 100V AC FOR 1 MINUTE
   1-4. INSULATION RESISTANCE: 100MOHOMS MIN.
2. MECHANICAL CHARACTERISTICS:
   2-1. INSERTION FORCE : 35N MAX. INITIAL.
   2-2. WITHDRAWAL FORCE : 10N MIN. INITIAL,8N MIN. FOR AFTER TEST.
3. DURABILITY: 5,000 CYCLES,
4. OTHER SPEC TO REFER 2UB2311-000211F SPEC.
5. TO CONFORM TO SINGATRON HAZARDOUS SUBSTANCE FREE SPEC.
6. HALOGEN FREE PRODUCT IDENTIFICATION MARK : ◎
7. HALOGEN FREE PRODUCT IDENTIFICATION LABEL ON PACKAGING:
8. FOR REFLOW SOLDERING LEAD-FREE PROCESS.
9. PACKAGING : TAPE & REEL.

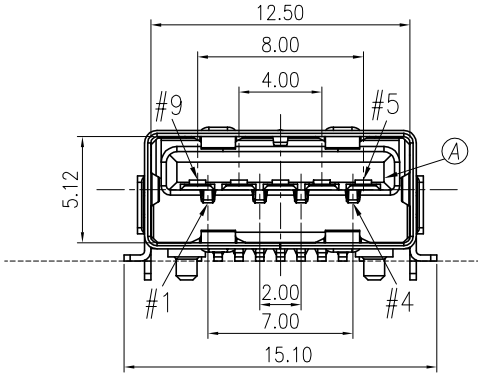

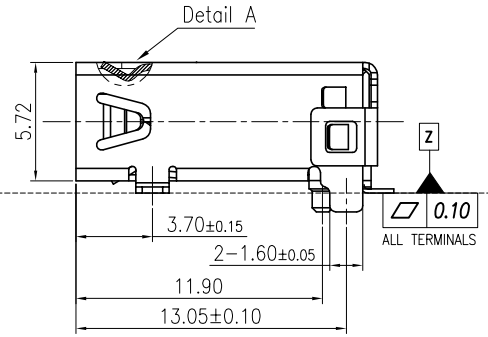

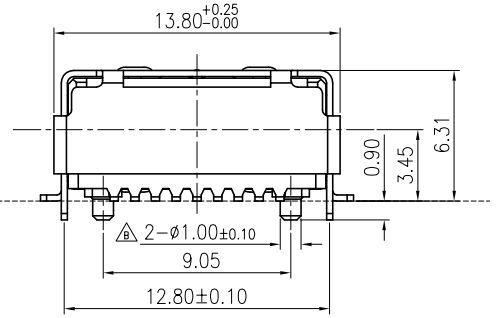

Pin NO.	Signal Assignment
# 1	VBUS
# 2	D-
# 3	D+
# 4	GND
# 5	Stda_SSR-
# 6	Stda_SSR+
# 7	GND_DRAIN
# 8	Stda_SST-
# 9	Stda_SST+
SHELL	Shield

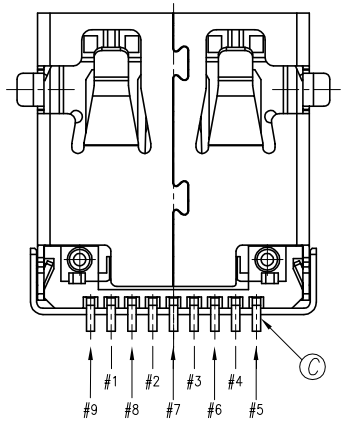

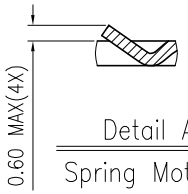

Detail A

Spring Motion Highest Point

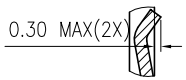

Detail B

Spring Motion Highest Point

NO	DESCRIPTION	QTY	MATERIAL	PLATING & COLOR
C	9P TERMINAL	5	COPPER ALLOY 0.20t	GOLD FLASH PLATED ON CONTACT AREA, 120u"TIN PLATING ON TAIL AND NI 60u" MIN. UNDER PLATING
B	SHELL	1	STEEL	NICKEL 60u"MIN
A	HOUSING	1	PA-10T+30%GF	BLUE 300C

UNLESS OTHERWISE SPECIFED TOLERANCES

DECIMALS: X :±0.5, X.X :±0.3, X.XX :±0.2

ANGLES: X :±2°, X.X :±1°

Singatron Enterprise Co., Ltd.
信音企業股份有限公司

TITLE	USB3.0 CONNECTOR			
DWN	He	PART NO. 2UB2311-000211F		
CHKD	James	SCALE 4:1	UNIT: mm	
APVD	Boye	SIZE: A3	SHEET:1 OF 1	REV: B

CUSTOMER COPY

文件編號 RD-06-043-A