REV.	ECN NO OR DESCRIPTION	REVISED	DATE
A	PRODUCE REALEASE	JIANGUO	2010.11.18
B	ECN:C110131Modify Layout Dim	LONGJIANG	2011.5.30
C	ECN NO:C110149-14 Modify Plating specification	BILLY	2011.06.13

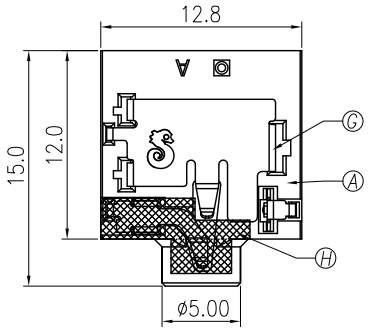

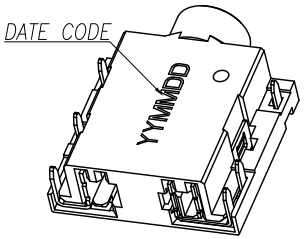

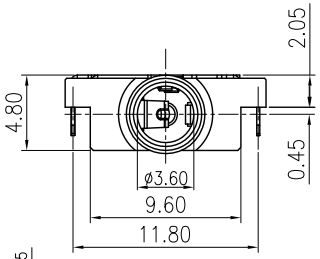

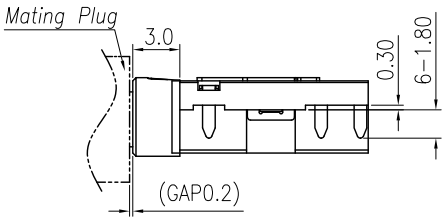

SPECIFICATIONS:

1. ELECTRICAL CHARACTERISTICS:
   - 1-1. RATING:12V AC, 1A DC.
   - 1-2. CONTACT RESISTANCE: 50m ΩMAX.
   - 1-3. DIELECTRIC WITHSTANDING VOLTAGE: 500V AC FOR ONE MINUTE.
   - 1-4. INSULATION RESISTANCE: 100MΩ MIN. MEASURED BY 500 VDC
2. MECHANICAL CHARACTERISTICS:
   - 2-1. INSERTION FORCE : 0.4~3.0 KGF
   - 2-2. WITHDRAWAL FORCE : 0.3~2.0 KGF
3. LIFE TEST: 5,000 CYCLES MIN.
4. OTHER GENERAL SPEC. TO REFER "2SJ2285 SERIES SPEC".
5. TO CONFORM TO THE SINGATRON HAZARDOUS SUBSTANCE FREE SPEC.
6. HALOGEN FREE PRODUCT IDENTIFICATION MARK ON JACK: ◎
7. HALOGEN FREE PRODUCT IDENTIFICATION LABEL ON PACKAGING:
8. FOR REFLOW SOLDERING LEAD-FREE PROCESS.
9. PACKAGING:TAPE&REEL

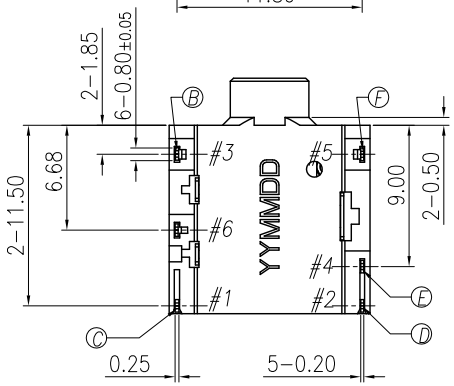

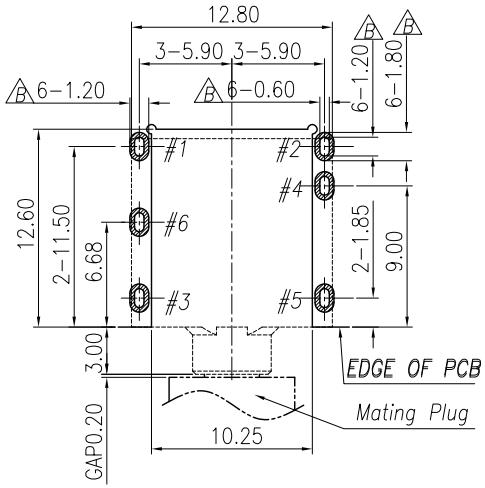

RECOMMENDED P.C.B. LAYOUT T=1.20

TOP VIEW (TOLRANCE: ±0.05)

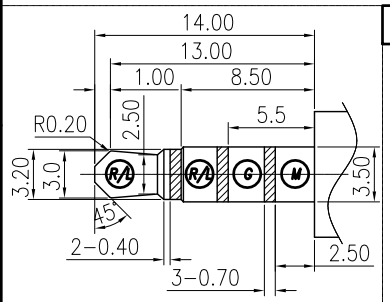

3.5ø 4 POLE PLUG

TOLERANCE:±0.05

SCHEMATIC

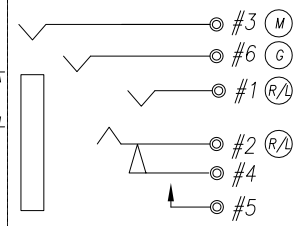

NO	DESCRIPTION	QTY	MATERIAL	PLATING & COLOR
H	MYLAR	1	0.075T	BLACK
G	SHIELD	1	COPPER ALLOY 0.20T	B Au 5u" on contact area, all over Nickel plated
F	MAKE TERMINAL	1	COPPER ALLOY 0.20T	GOLD FLASH
E	TRANSFER TERMINAL	1	COPPER ALLOY 0.20T	B Au 5u" on contact area and Gold flash on solder tail, all over Nickel Plated
D	RING	1	COPPER ALLOY 0.20T	
C	TIP	1	COPPER ALLOY 0.25T	
B	EARTH	1	COPPER ALLOY 0.20T	GOLD FLASH
A	BODY	1	HIGH TEMP.THERMOPLASTIC UL 94V-0	BLACK

UNLESS OTHERWISE SPECIFED TOLERANCES

DECIMALS: X :±0.5, X.X :±0.3, X.XX :±0.2

ANGLES: X :±2°, X.X :±1°

Singatron Enterprise Co., Ltd.
信音企業股份有限公司

TITLE	3.5ø PHONE JACK			
DWN	BILLY 2011.6.16	PART NO. 2SJ2326-000111		
CHKD	ZJZ 2011.6.15	SCALE 3:1	UNIT: mm	
APVD	Liao 2011.6.15	SIZE: A3	SHEET: 1OF1	REV: C

CUSTOMER COPY

文件編號 RD-06-043-A