REV.	ECN NO OR DESCRIPTION	REVISED	DATE
A	PDR RELEASE	IVY-C	2015.02.03
B	ECN NO: L160001	IVY-C	2016.01.05

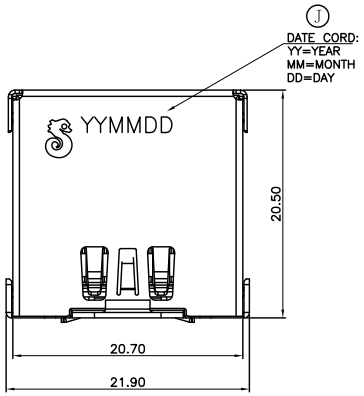

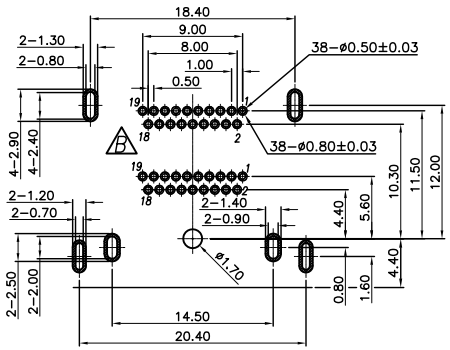

RECOMMENDED PCB LAYOUT(TOP VIEW)
(THICKNESS=1.6±0.10mm)
(TOLERANCE=±0.05mm)

SPECIFICATIONS:

1. ELECTRICAL CHARACTERISTICS:
   1-1. CURRENT RATING: 0.5 AMP.
   1-2. VOLTAGE RATING: 40V.
   1-3. CONTACT RESISTANCE: 30mΩ MAX.
   1-4. INSULATION RESISTANCE: 100MΩ MIN. @ 500V DC.
   1-5. DIELECTRIC WITHSTANDING VOLTAGE: 500V AC FOR 1 MINUTE.
2. MECHANICAL CHARACTERISTICS:
   2-1. INSERTION FORCE: 4.5Kgf MAX.
   2-2. WITHDRAWAL FORCE: 1.0~4.0Kgf.
3. LIFE TEST: 10,000 CYCLES.
4. OTHER GENERAL SPEC. TO REFER "HDMI SERIES SPEC".
5. TO CONFORM TO THE SINGATRON HAZARDOUS SUBSTANCE FREE SPEC.
6. HALOGEN FREE PRODUCT IDENTIFICATION LABEL ON PACKAGING:
7. PACKAGE: SEE "2HE1744 SERIES" PACKAGE.
8. FOR REFLOW SOLDERING LEAD-FREE PROCESS.

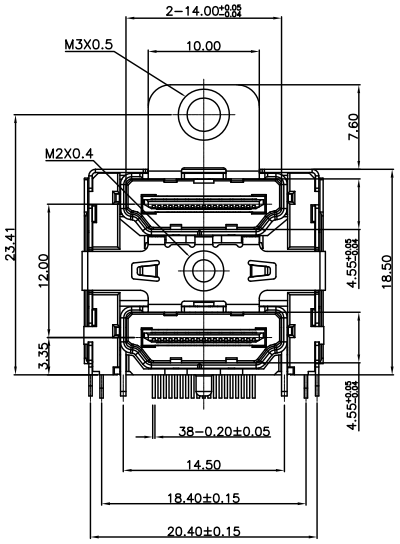

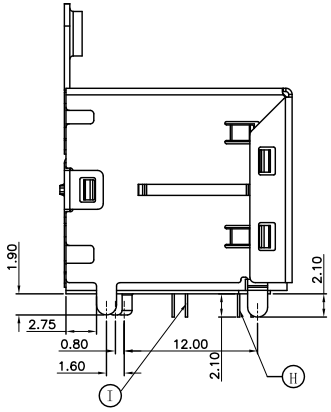

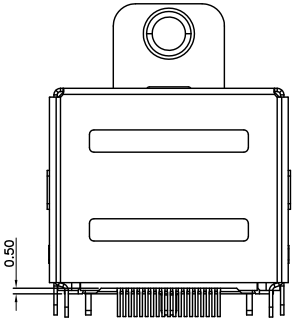

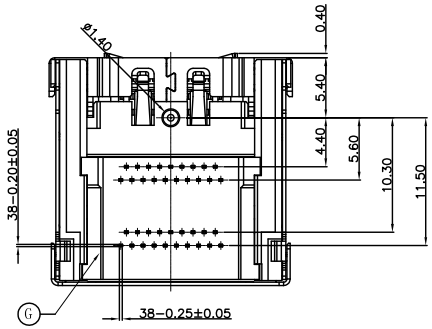

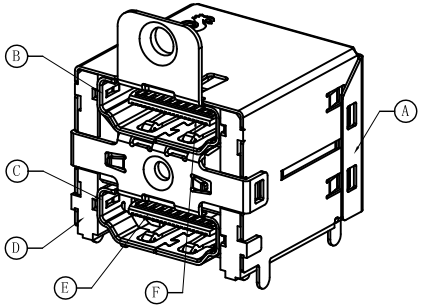

PART NO.
2HE1744-000111F

- SUFFIX: HALOGEN FREE
- PACKAGE
  1: TRAY
- HOUSING COLOR
  1: BLACK
- CONTACT PLATING
  1: GOLD FLASH ON CONTACT AREA, MATTE TIN ON SOLDER AREA

NO	DESCRIPTION	QTY	MATERIAL	PLATING & COLOR
J	INK			BLACK
I	BOTTOM CONTACT	19	C2680R-H, 0.2t	SEE PART NO.
H	UPPER CONTACT	19	C2680R-H, 0.2t	SEE PART NO.
G	SPACER	1	LCP E130i, UL94V-0	BLACK
F	HOUSING 2	1	LCP E130i, UL94V-0	BLACK
E	HOUSING 1	1	LCP E130i, UL94V-0	BLACK
D	FRAME	1	LCP E130i, UL94V-0	BLACK
C	BOTTOM SHELL	1	SUS304-1/4H, 0.5t	NICKEL PLATED
B	UPPER SHELL	1	SUS304-1/4H, 0.5t	NICKEL PLATED
A	OUT SHELL	1	SUS430, 0.3t	NICKEL PLATED

UNLESS OTHERWISE SPECIFIED TOLERANCES

DECIMALS:
X :±0.5
X.X :±0.3
X.XX :±0.2

ANGLES:
X :±2°
X.X :±1°

Singatron Enterprise Co., Ltd.
信音企業股份有限公司

TITLE	DOUBLE HDMI TYPE A FEMALE DIP TYPE		
DWN	IVY-C 2016.01.05	PART NO. 2HE1744-000111F	
CHKD	ANGELA2016.01.05	SCALE:N/A	UNIT: mm
APVD	ANGELA2016.01.05	SIZE: A3	SHEET:1 OF 1 REV: B

CUSTOMER COPY

文件編號 RD-06-043-A