REV.	ECN NO OR DESCRIPTION	REVISED	DATE
A	PRODUCT RELEASE	ARES	2011.12.27

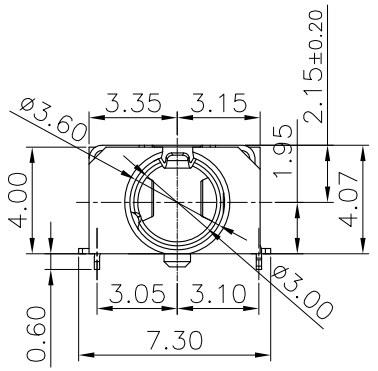

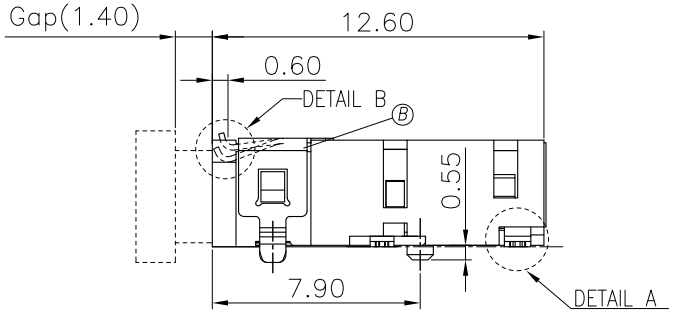

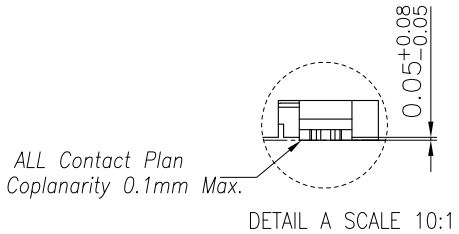

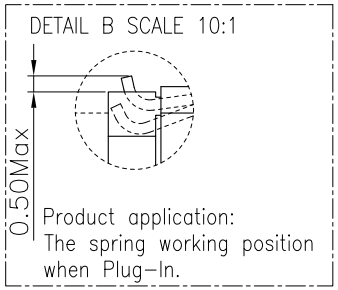

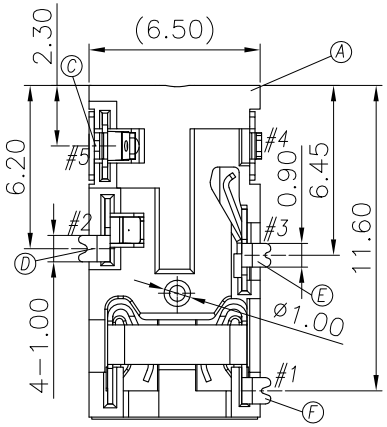

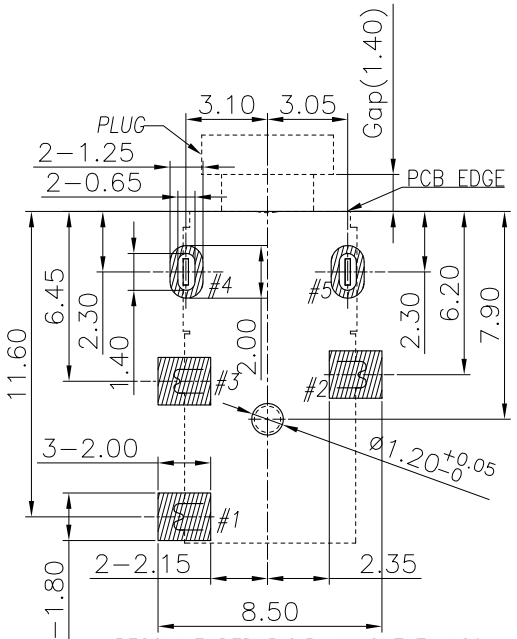

RECOMMENDED P.C.B. LAYOUT T=1.20
TOP VIEW (TOLRANCE: ±0.05)

SPECIFICATIONS:

1. ELECTRICAL CHARACTERISTICS:
   1−1. RATING: 12V 1A
   1−2. CONTACT RESISTANCE: 30mΩMAX.(INITIAL)
   1−3. DIELECTRIC WITHSTANDING VOLTAGE: 500V AC FOR ONE MINUTE.
   1−4. INSULATION RESISTANCE: 100MΩMIN. MEASURED BY 500 VDC
2. MECHANICAL CHARACTERISTICS:
   2−1. INSERTION FORCE : 0.3~3.0 Kgf .
   2−2. WITHDRAWAL FORCE : 0.3~3.0 Kgf .
3. LIFE TEST: 5,000 CYCLES .
4. OTHER GENERAL SPEC. TO REFER "GENERAL SPEC".
5. TO CONFORM TO SINGATRON HAZARDOUS SUBSTANCE FREE SPEC.
6. HALOGEN FREE PRODUCT IDENTIFICATION MARK: ◎
7. HALOGEN FREE PRODUCT IDENTIFICATION LABEL ON PACKAGING: HF SUBSTANCE FREE HAZARDOUS
8. FOR REFLOW SOLDERING LEAD−FREE PROCESS.
9. PACKAGING: TAPE & REEL.

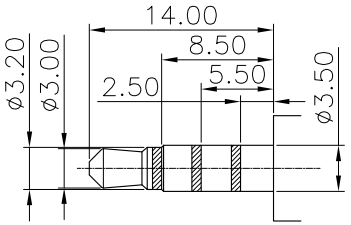

ø3.5 4−POLE STANDARD PLUG(TOL:±0.05)

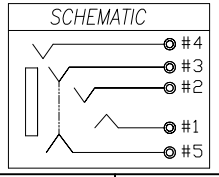

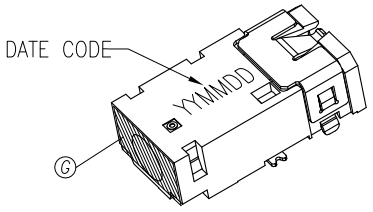

NO	DESCRIPTION	QTY	MATERIAL	PLATING & COLOR
G	MYLAR	1	Mylar 0.06T	BLACK
F	TIP SPRING	1	COPPER ALLOY 0.20t	Gold Flash On Contact Area & Solder tail, All over Nickel Plated
E	RING−B1	1	COPPER ALLOY 0.2t	
D	RING−A	1	COPPER ALLOY 0.2t	
C	RING−B	1	COPPER ALLOY 0.2t	
B	EARTH	1	COPPER ALLOY 0.20t	
A	BODY	1	HIGH TEMP. THERMOPLASTIC UL94−V0	BLACK

UNLESS OTHERWISE SPECIFED TOLERANCES

DECIMALS: X :±0.5, X.X :±0.3, X.XX :±0.2

ANGLES: X :±2°, X.X :±1°

Singatron Enterprise Co., Ltd.
信音企業股份有限公司

TITLE	ø3.5 PHONE JACK		
DWN	ARES 2011.12.27	PART NO. 2SJ2342−000111F	
CHKD	WINKAN 2011.12.27	SCALE 5:1	UNIT: mm
APVD	LIAO 2011.12.27	SIZE: A3	SHEET: 1OF1
			REV: A

CUSTOMER COPY

文件編號: RD−06−043−A