REV.	ECN NO OR DESCRIPTION	REVISED	DATE
C	ADD DATE CODE	HAIHUA	7/10'07
D	C080169, DWG UPDATE	R.YUAN	2008.10.14

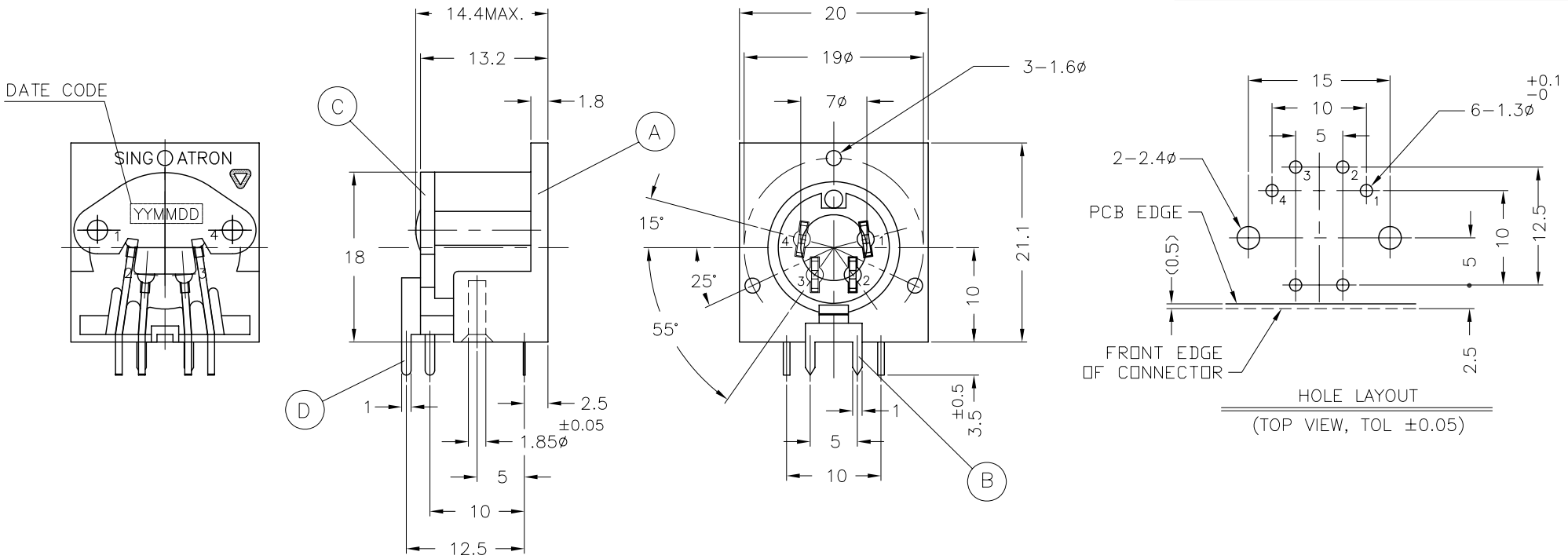

SPECIFICATIONS:

1. CURRENT RATING: AC: 100V 1A
   DC: 24V 2A
2. CONTACT RESISTANCE: 20mΩ MAX.
3. INSULATION RESISTANCE: DC 500V 100MΩ MIN.
4. VOLTAGE WITHSTANDING: AC 500V 1 MINUTE
5. INSERTION FORCE: 5Kg MAX.
6. WITHDRAWAL FORCE: 0.6Kg MIN.
7. LIFE TEST: 5,000 CYCLES MIN. AFTER TESTING, CONTACT RESISTANCE SHALL NOT EXCEED 100mΩ.
8. UNLESS OTHERWISE SPECIFID TOLERANCE ARE: ±0.2
9. TO CONFORM TO SINGATRON HAZARDOUS SUBSTANCE FREE SPEC.
10. FOR 260°C 10SEC WAVE SOLDERING LEAD-FREE PROCESS.
11. PRINTED DATE CODE" YYMMDD " ON TOP OF CONNECTOR.

YYMMDD
- DD: DAY
- MM: MONTH
- YY: YEAR

NO	DESCRIPTION	QTY	MATERIAL	PLATING & COLOR
D	CONTACT TERMINAL	4	COPPER ALLOY 0.7t	TIN PLATING
C	PLATE	1	BAKELITE BOARD 1.2t	
B	EARTH TERMINAL	1	COPPER ALLOY 0.2t	TIN PLATING
A	BODY	1	THERMOPLASTIC, UL 94V-0, BLACK	

UNLESS OTHERWISE SPECIFED TOLERANCES

DECIMALS: X :±0.5, X.X :±0.3, X.XX :±0.2

ANGLES: X :±2°, X.X :±1°

Singatron Enterprise Co., Ltd.
信音企業股份有限公司

TITLE	4P 210° DIN CONNECTOR		
DWN	R.YUAN 2008.10.14	PART NO. 2DJ-0224P004	
CHKD		SCALE 1:1	UNIT: mm
APVD	R.YUAN 2008.10.14	SIZE: A3	SHEET:1 OF 1	REV: D

CUSTOMER COPY

文件編號 RD-06-043-A