REV.	ECN NO OR DESCRIPTION	REVISED	DATE
C	客· 版本變更 ECN NO.: C100242	KENSON	2010.7.1
D	ECN NO.: C100600 MODIFY SINGATRON P/N	LONGJIANG	2010.12.17
E	ECN NO.: C110116	BILL	2011.4.19

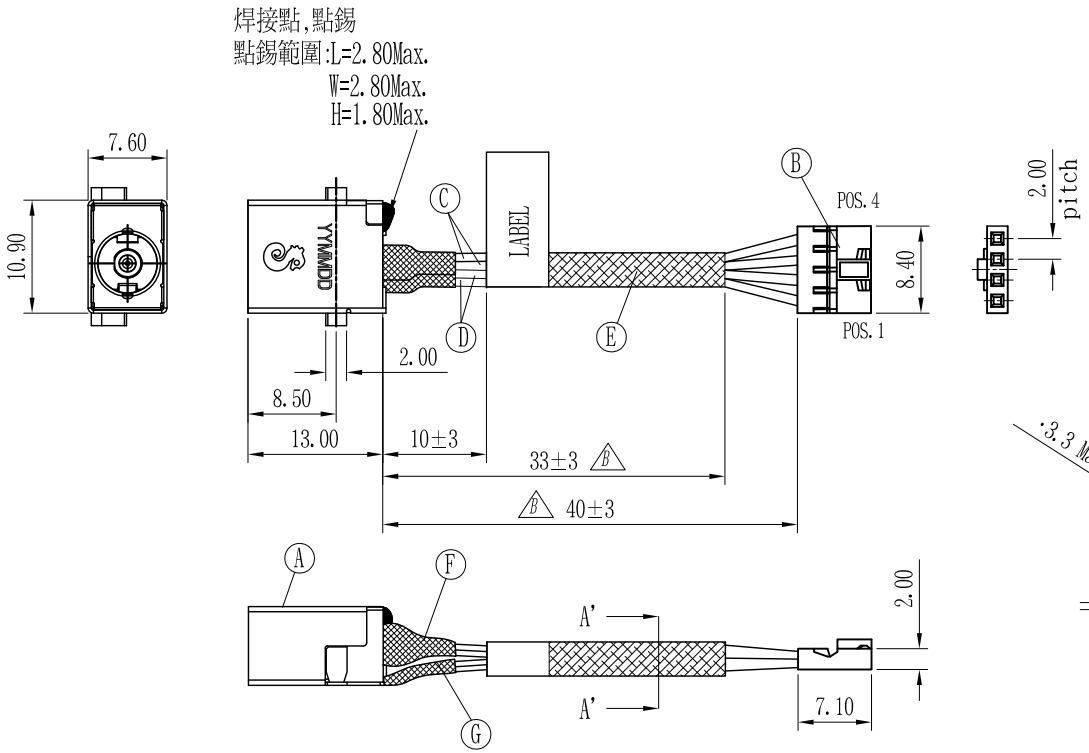

SCHEMATIC

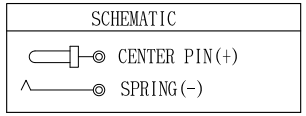

WIRE DIAGRAM		
DC POWER JACK	WIRE COLOR	CONNECTOR
CENTER PIN(+)	RED	POS. (1,2)
SPRING(-)	BLACK	POS. (3,4)

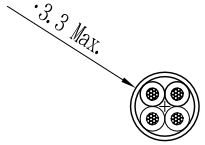

A'-A' SECTION

SCALE:4:1

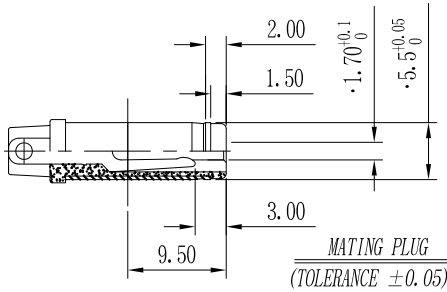

MATING PLUG
(TOLERANCE ±0.05)

DC JACK 插入深度

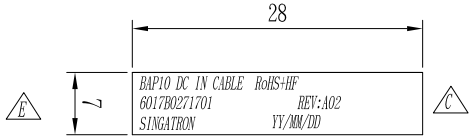

LABEL DESCRIPTION

;SPECIFICATIONS:

1. ELECTRICAL CHARACTERISTICS:
   - 1-1. RATING:20V 7A
   - 1-2. CONTACT RESISTANCE:30m MAX. (INITIAL)
   - 1-3. DIELECTRIC WITHSTANDING VOLTAGE:250V AC FOR ONE MINUTE.
   - 1-4. INSULATION RESISTANCE:100M MIN. MEASURED BY 500V DC.
2. LIFE TEST:5000 CYCLES MIN.
3. TO CONFORM TO SINGATRON HAZARDOUS SUBSTANCE FREE SPEC.
4. HALOGEN FREE PRODUCT IDENTIFICATION MARK ON JACK:
5. HALOGEN FREE PRODUCT IDENTIFICATION LABEL ON PACKAGING:
6. CONNECTOR:SUIT "ACES-88301-00411 OR TU2003HNO-4P" SPEC.

NO	DESCRIPTION	QTY	MATERIAL	PLATING & COLOR
H	LABEL	1	28X6	N/A
G	HEAT SHRINK TUBE	1	300V, 125°	BLACK COLOR
F	HEAT SHRINK TUBE	1	300V, 125°	BLACK COLOR
E	ACETATE CLOTH TAPE	1	N/A	BLACK COLOR
D	WIRE	2	UL 10368 28 AWG	BLACK COLOR
C	WIRE	2	UL 10368 28 AWG	RED COLOR
B	CONNECTOR(B)	4	TERMINAL : COPPER ALLOY	GOLD PLATING
		1	HOUSING : THERMOPLASTICS UL94V-0	WHITE
A	DC POWER JACK	1	SINGATRON P/N: 2DC2024-000111	BLACK

UNLESS OTHERWISE SPECIFED TOLERANCES

DECIMALS: X :±0.5, X.X :±0.3, X.XX :±0.2

ANGLES: X :±2°, X.X :±1°

Singatron Enterprise Co., Ltd.
信音企業股份有限公司

TITLE	DC POWER JACK + WIRE		
DWN	BILL 11.04.20	PART NO. 2DW2022-100113	
CHKD	LYG 11.04.20	SCALE 2:1	UNIT: mm
APVD	KEVIN 11.04.20	SIZE: A3	SHEET: 1 OF 1

REV: E

CUSTOMER COPY

文件編號 RD-06-043-A