| REV. | ECN NO OR DESCRIPTION | REVISED | DATE |
|---|---|---|---|
| A | PRELIMINARY | 伍壯志 | 02/03'07 |

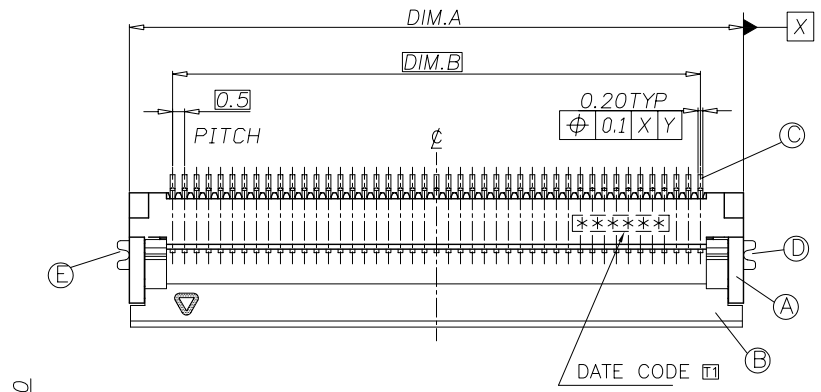


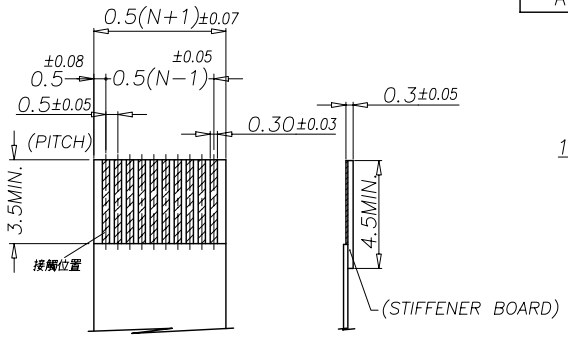


APPLICABLE FFC RECOMMENDED DIMENSION

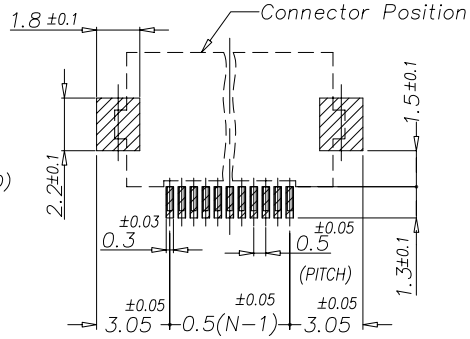


RECOMMEND P.C.B LAYOUT
(TOP VIEW)

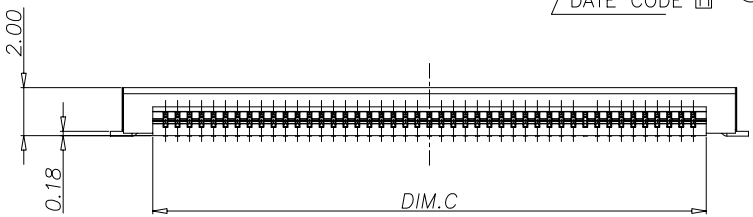


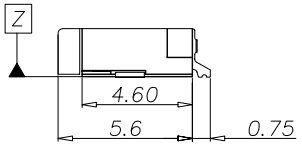


PART NO. INFORMATION

2FP2000−XXXXXX

- PACKAGE
  1: TAPE & REEL
- HOUSING COLOR
  1: NATURAL COLOR
- CONTACT PLATING
  3: TIN PLATED
- CONTACK SIDE
  1: BOTTOM CONTACT
- NUMBER OF CONTACTs(N)

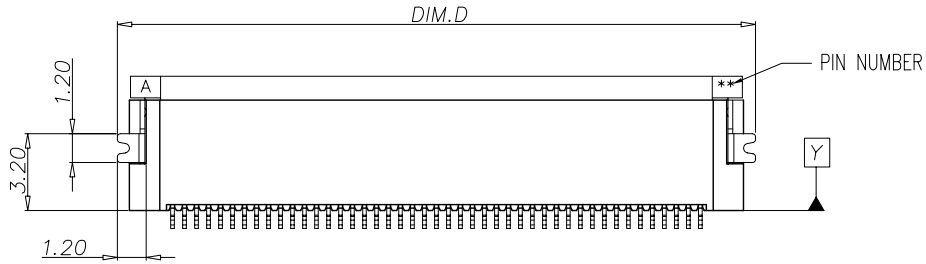


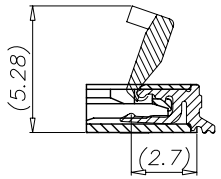


NOTES
1. TO CONFORM TO THE "SE−01−001" & "ROHS DIRECTIVE"
2. GREEN PRODUCT IDENTIFICATION MARK IN JACK:
3. GREEN PRODUCT IDENTIFICATION LABEL IN PACKING: **G.P. PASS**
4. FOR LEAD−FREE PROCESS.
5. PACKING: TAPE & REEL
T1 6. DATE CODE: ******
- Day
- Month
- Year

| PART NO | PINS | DIM.A | DIM.B | DIM.C | DIM.D |
|---|---|---|---|---|---|
| 2FP2000−181301 | 18 | 12.10 | 8.50 | 9.57 | 13.10 |
| 2FP2000−551301 | 55 | 30.60 | 27.00 | 28.07 | 31.60 |
| 2FP2000−361301 | 36 | 21.10 | 17.50 | 18.57 | 22.10 |

| NO | DESCRIPTION | QTY | MATERIAL | PLATING & COLOR |
|---|---|---|---|---|
| E | METAL TAB−L | 1 | COPPER ALLOY 0.2t | Sn 40~50u" OVER Ni 20~30u" |
| D | METAL TAB−R | 1 | COPPER ALLOY 0.2t | Sn 40~50u" OVER Ni 20~30u" |
| C | TERMINAL | X | COPPER ALLOY 0.2t | Sn 40~50u" OVER Ni 20~30u" |
| B | ACTUATOR | 1 | HIGH TEMP.THERMOPLASTICS | DARK BROWN |
| A | HOUSING | 1 | HIGH TEMP.THERMOPLASTICS | NATURAL COLOR |

UNLESS OTHERWISE SPECIFED TOLERANCES

DECIMALS: X :±0.5, X.X :±0.3, X.XX :±0.2

ANGLES: X :±2°, X.X :±1°

Singatron Enterprise Co., Ltd.
信音電子(中山)有限公司

| | | | |
|---|---|---|---|
| TITLE | 0.5 FPC(2.0H) | | |
| DWN | 伍壯志 02/03'07 | PART NO: 2FP2000−XX1301 | |
| CHKD | 劉木遠 | SCALE:N/A | UNIT: mm |
| APVD | 隆 輝 | SIZE: A4 | SHEET: 1OF1 | REV: A |

CUSTOMER COPY

Form: 2

文件編號: RD−06−035−A