| REV. | ECN NO OR DESCRIPTION | REVISED | DATE |
|---|---|---|---|
| A | PDR RELEASE<br>SERIES APPROVED<br>2HE1503-001111 → 2HE1503-001X11 | AMYC | 2009.08.21 |
| B | ECN NO.L090073 | IVY-C | 2009.12.29 |

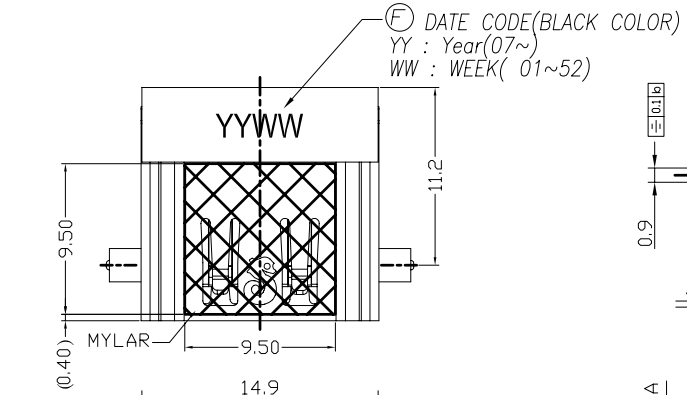


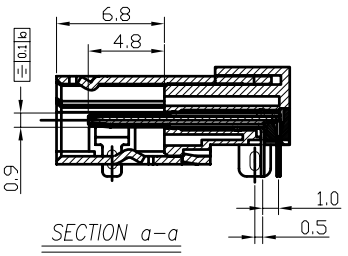


SECTION a–a

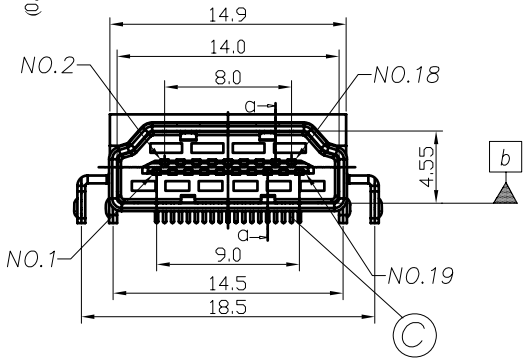


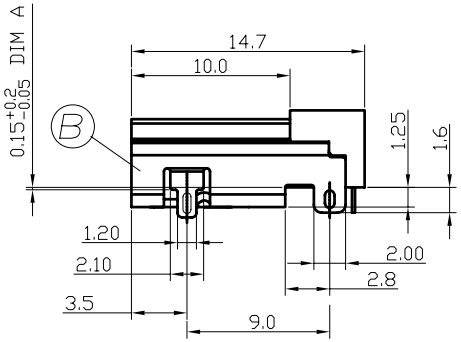


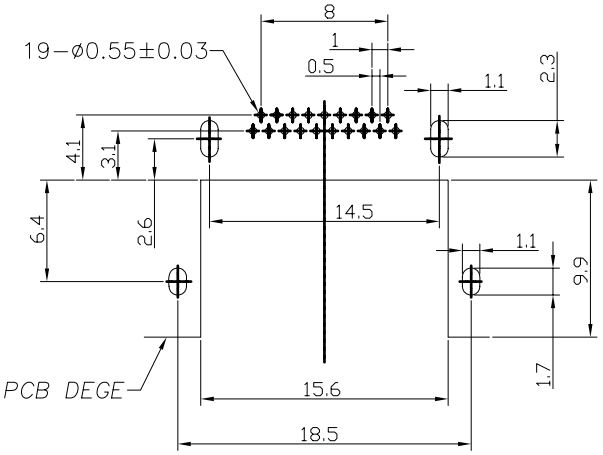


RECOMMENDED PCB LAYOUT (THICKNESS=1.2±0.10mm)
Tolerance: ±0.05
JACK TOP VIEW

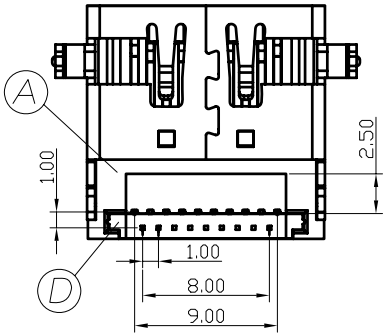


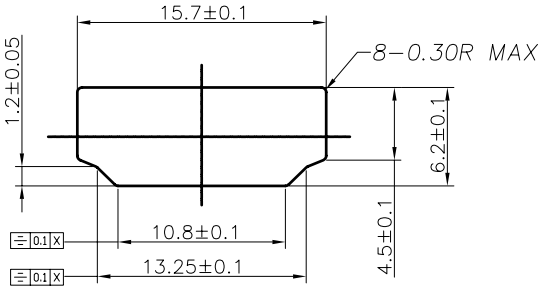


SPECIFICATIONS:
1. HALOGEN FREE PRODUCT IDENTIFICATION LABEL ON PACKAGING:
2. SOLDER HEAT RESISTANCE : 260°C 10 SECS.
3. TO CONFORM TO THE SINGATRON HSF SPECIFICATION".
4. SEE "2HE1503 SERIES" SPECIFICATIONS
5. PACKAGE : SEE " 2HE1503-001111 " PACKAGE

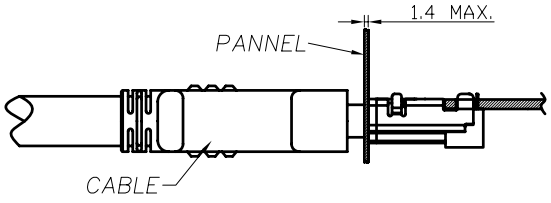


REFERENCE MOUNT DIMENSION

PART NO.
2HE1503-001X11
- PACKAGE
  - 1: T&R
- HOUSING COLOR
  - 1: BLACK
- CONTACT PLATING
  - 1. Au 30u"
  - 2. GOLD FLASH
- DIM A: 0.15mm

| NO | DESCRIPTION | QTY | MATERIAL | PLATING & COLOR |
|---|---|---|---|---|
| F | INK | 1 | | BLACK |
| E | MYLAR | 1 | | |
| D | COVER | 1 | LCP UL 94V-0 | BLACK COLOR |
| C | CONTACT | 19 | BRASS_C2680 0.2t | SEE "PART NO" |
| B | SHELL | 1 | BRASS_C2680 0.5t | NICKEL PLATING |
| A | HOUSING | 1 | LCP UL 94V-0 | BLACK COLOR |

UNLESS OTHERWISE SPECIFED TOLERANCES

Singatron Enterprise Co., Ltd.
信音企業股份有限公司

DECIMALS: X :±0.5 X.X :±0.3 X.XX :±0.2
ANGLES: X :±2° X.X :±1°

| | | | | |
|---|---|---|---|---|
| TITLE | HDMI RECEPTACLE REVERSE DEEP THROUHT HOLE TYPE | | | |
| DWN | IVY-C 2009.12.29 | PART NO. 2HE1503-001X11 | | |
| CHKD | DAVID-T 2009.12.29 | SCALE:N/A | UNIT: mm | |
| APVD | DAVID-T 2009.12.29 | SIZE: A3 | SHEET: 1OF1 | REV: B |

CUSTOMER COPY

文件編號 RD-06-043-A