REV.	ECN NO OR DESCRIPTION	REVISED	DATE
A	PDR RELEASE	KIKI	2007.10.16

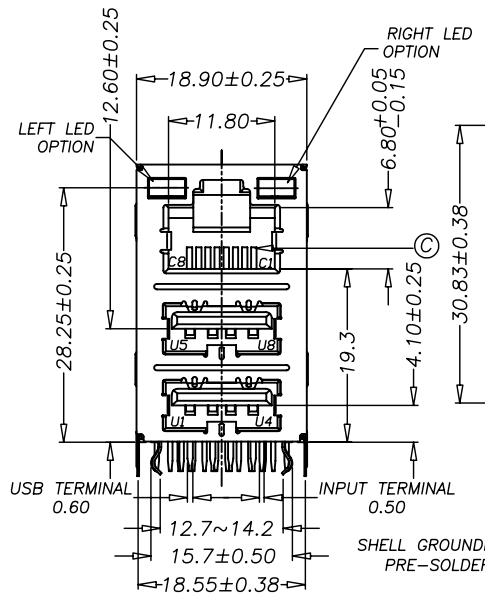

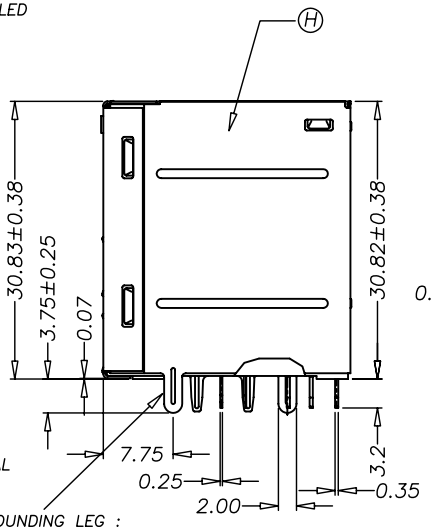

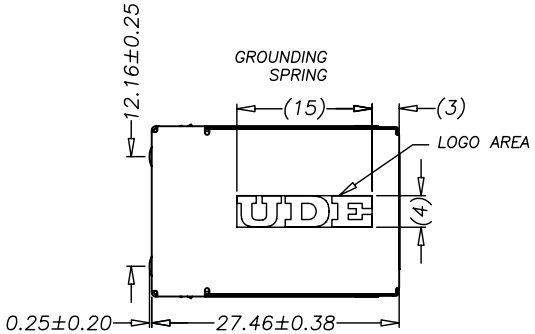

SPECIFICATIONS:

1. SOLDER HEAT RESISTANCE: WAVE SOLDERING 260°C 10SECS.
2. TO CONFORM TO THE "SE-01-001" & "ROHS DIRECTIVE"
3. GREEN PRODUCT IDENTIFICATION LABEL IN PACKING: G.P. PASS
4. SEE "2TJ1512-000111" SPECIFICATION

CODE	LEFT LED		RIGHT LED	
	-L3/+L4	+L3/-L4	-L1/+L2	+L1/-L2
1	GREEN		YELLOW	

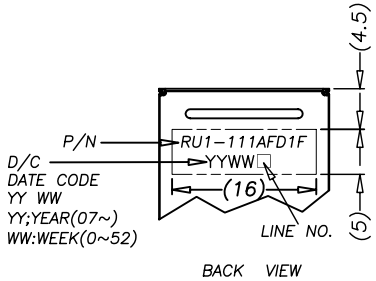

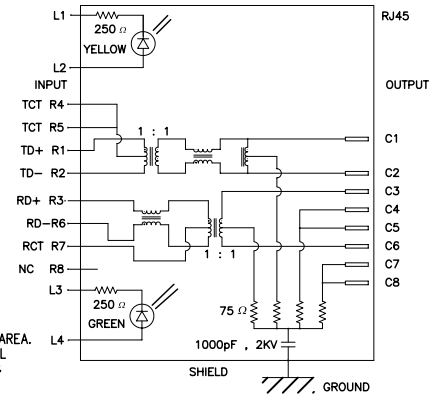

PART NO.
2TJ1512-000111
- PACKAGE
  1: TRAY
- HOUSING COLOR
  1: BLACK
- TERMINAIL PLATING
  1: GOLD 30μ ON CONTACT AREA. TIN 100μ ON SOLDER TAIL ALL OVER NI 50μ -100μ

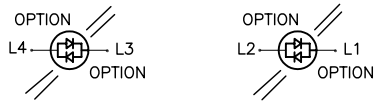

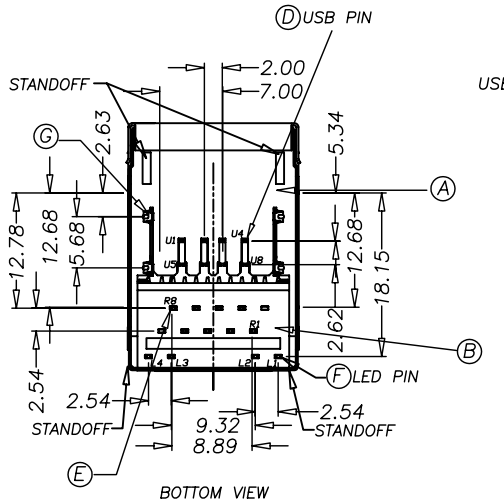

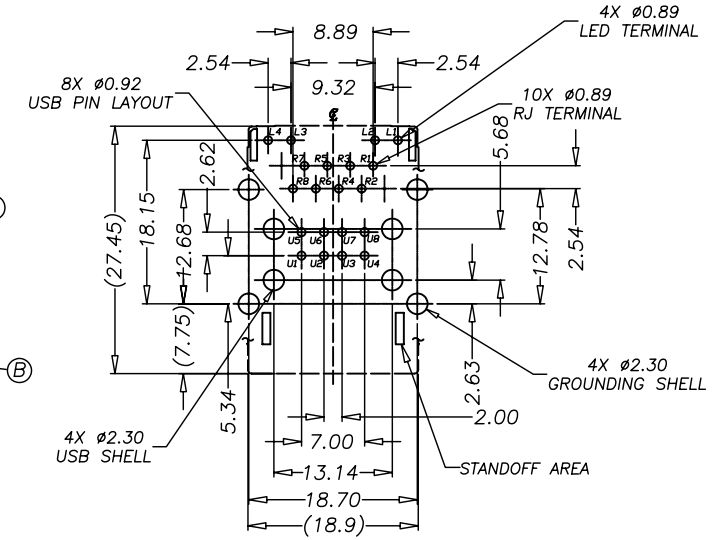

RECOMMENDED PCB LAYOUT(8P10C)
COMPONENT SIDE PCB THICKNESS : 1.60mm
ALL DIMENSION TOLERANCE ARE ±0.05 UNLESS OTHERWISE SPECIFIED
TOP VIEW

NO	DESCRIPTION	QTY	MATERIAL	PLATING & COLOR
H	SHELL	1	FRONT SHELL STAINLESS 0.25t BACK SHELL STAINLESS 0.20t	100μ TIN OVER 50-100μ MIN NI
G	GROUNDING LEG OF USB	4	BRASS 0.25t	100μ TIN OVER 50-100μ MIN NI
F	LED TERMINAL	4	BRASS 0.35t	100μ TIN OVER 50-100μ MIN NI
E	RJ INPUT TERMINAIL	4	BRASS 0.35t	100μ TIN OVER 50-100μ MIN NI
D	USB TERMINAIL	8	PHOSPHOR BRONZE 0.25t	GOLD 30μ ON CONTACT AREA. TIN 100μ ON SOLDER TAIL ALL OVER NI 50 -100μ
C	RJ OUTPUT TERMINAIL	4	PHOSPHOR BRONZE 0.30t	GOLD 30μ ON CONTACT AREA. TIN 100μ ON SOLDER TAIL ALL OVER NI 50 -100μ
B	COVER	1	THERMOPLASTIC PBT UL94V-0	BLACK COLOR
A	HOUSING	1	THERMOPLASTIC PBT UL94V-0	BLACK COLOR

UNLESS OTHERWISE SPECIFED TOLERANCES

DECIMALS: X :±0.5, X.X :±0.3, X.XX :±0.2
ANGLES: X :±2°, X.X :±1°

Singatron Enterprise Co., Ltd.
信音企業股份有限公司

TITLE	RJ45 + USB Stack 2.0 w/ LED & Transformer,10/100Base		
DWN	KIKI 2007/10/16	PART NO.2TJ1512-000111	
CHKD	JOHNSON 2007/10/16	SCALE:1/1	UNIT: mm
APVD	JOHNSON 2007/10/16	SIZE: A3	SHEET: 1OF1	REV: A

CUSTOMER COPY

文件編號 RD-06-035-1A