REV.	ECN NO OR DESCRIPTION	REVISED	DATE
A	PDR RELEASE	AMYC	2009.04.20

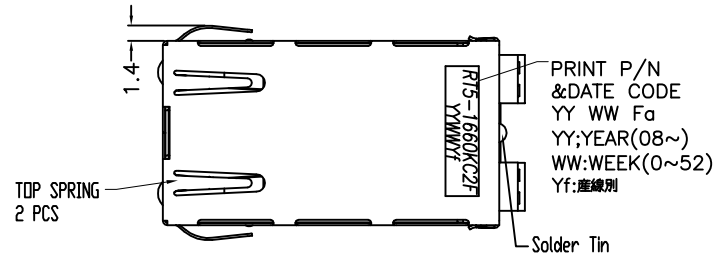

SPECIFICATIONS:

1. OTHER GENERAL SPEC. TO REFER "2TJ1522 SERIES SPEC".
2. TO CONFORM TO SINGATRON HAZARDOUS SUBSTANCE FREE SPEC.
3. GREEN PRODUCT IDENTIFICATION LABEL ON PACKAGING: **G.P. PASS**
4. FOR WAVE SOLDERING LEAD-FREE PROCESS.
5. PACKAGE: SEE "2TJ1522 SERIES" PACKAGE.

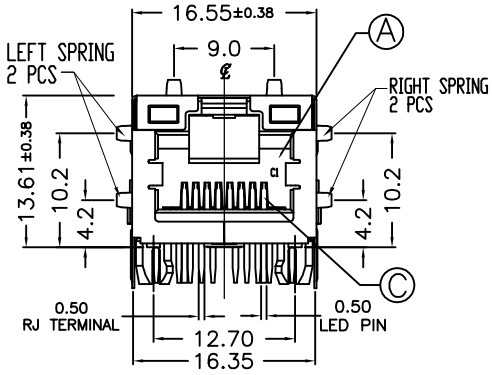

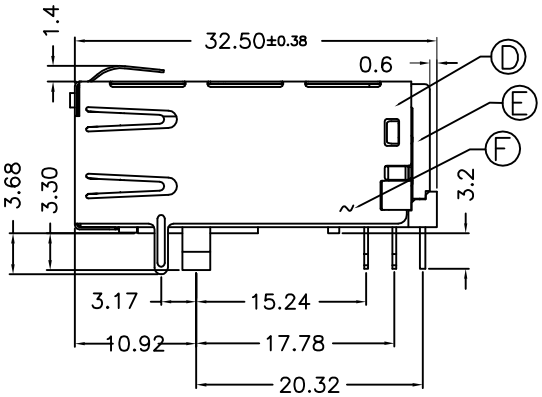

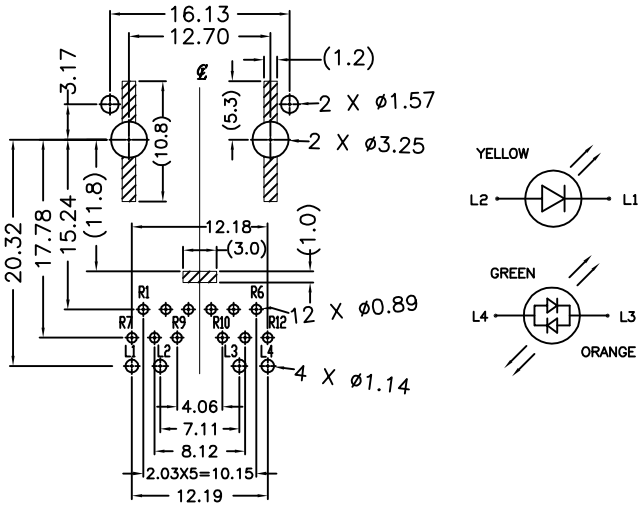

RECOMMENDED PCB LAYOUT
COMPONENT SIDE
ALL DIMENSION TOLERANCE ARE ± 0.05 mm
UNLESS OTHERWISE SPECIFIED

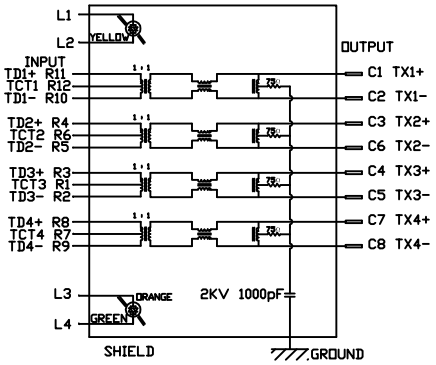

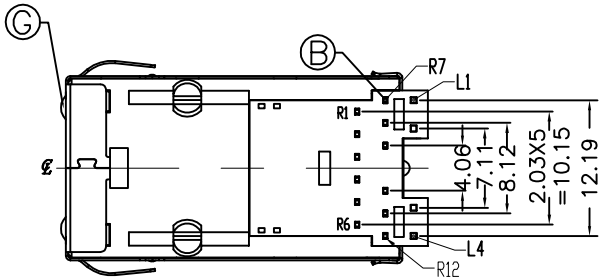

PART NO.
2TJ1522-000111
- **PACKAGE**
  1: TARY
- **HOUSING COLOR**
  1: BLACK
- **CONTACT PLATING**
  1: Au /TIN PLATING

NO	DESCRIPTION	QTY	MATERIAL	PLATING & COLOR
G	LED	2	LED	
F	PCB	1	PCB	
E	Cover Spacer	1	PBT	BLACK COLOR
D	SHELL	1	SUS304	
C	OUTPUT CONTACT	12	BRASS (C5210)	Au PLTING
B	INTPUT CONTACT	12	BRASS (C2680)	TIN PLTING
A	HOUSING	1	PA6T	BLACK COLOR

UNLESS OTHERWISE SPECIFED TOLERANCES

DECIMALS: X :±0.5, X.X :±0.3, X.XX :±0.2

ANGLES: X :±2°, X.X :±1°

Singatron Enterprise Co., Ltd.
信音企業股份有限公司

TITLE	RJ45 1*1 w/ LED & Transformer		
DWN	AMYC 2009.04.20	PART NO.2TJ1522-000111	
CHKD	JOHNSON 2009.04.20	SCALE:N/A	UNIT: mm
APVD	JOHNSON 2009.04.20	SIZE: A3	SHEET:1 OF 1 REV: A

CUSTOMER COPY

SEE "TABLE 1"

PART NO.	Left LED		Right LED	
	-L3/+L4	+L3/-L4	-L1/+L2	+L1/-L2
2TJ1522-000111	GREEN	ORANGE	YELLOW	

文件編號 RD-06-044-A