REV.	ECN NO OR DESCRIPTION	REVISED	DATE
A	PDR RELEASE	AMYC	2009.04.23

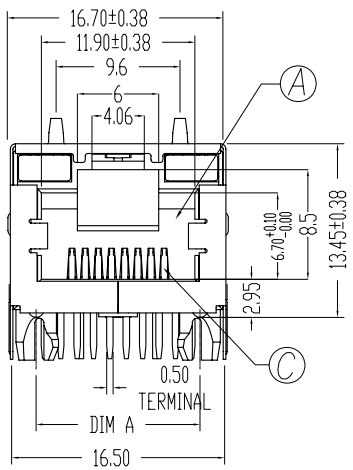

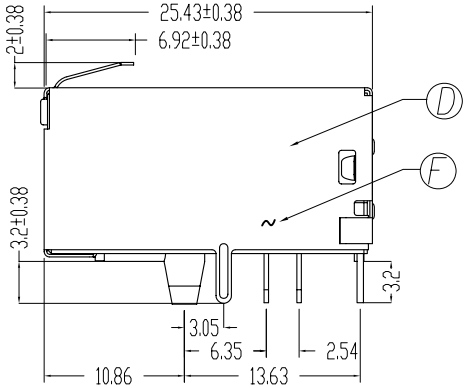

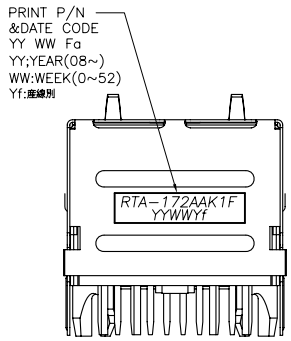

SPECIFICATIONS:

1. OTHER GENERAL SPEC. TO REFER "2TJ1523 SERIES SPEC".
2. TO CONFORM TO SINGATRON HAZARDOUS SUBSTANCE FREE SPEC.
3. GREEN PRODUCT IDENTIFICATION LABEL ON PACKAGING: **G.P. PASS**
4. FOR HAND SOLDERING LEAD-FREE PROCESS.
5. PACKAGE: SEE "2TJ1523 SERIES" PACKAGE.

PART NO.

2TJ1523-000111

- *PACKAGE*
  - *1: TRAY*
- *HOUSING COLOR*
  - *1: BLACK*
- *CONTACT PLATING*
  - *1: Au / TIN PLATING*

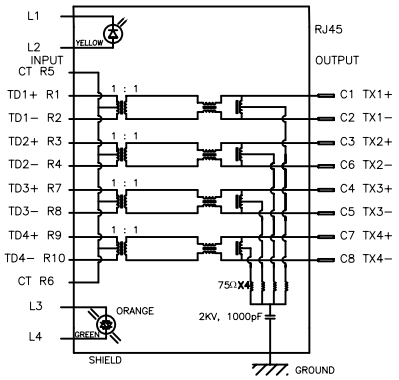

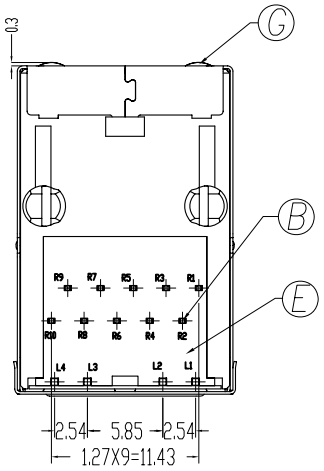

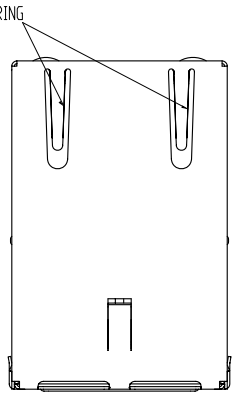

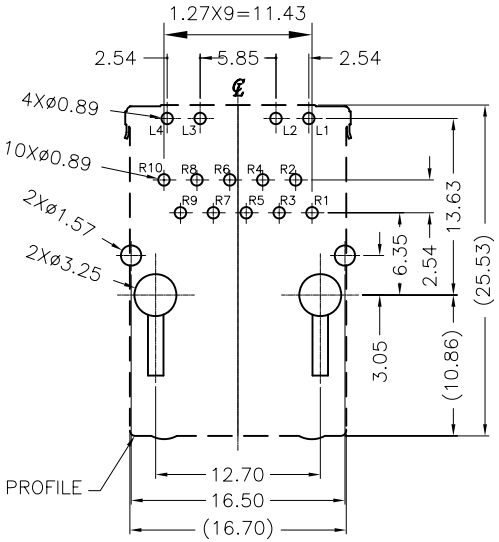

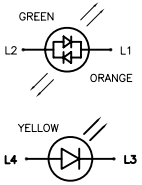

RECOMMENDED PCB LAYOUT
COMPONENT SIDE
ALL DIMENSION TOLERANCE ARE ±0.05mm
UNLESS OTHERWISE SPECIFIED

NO	DESCRIPTION	QTY	MATERIAL	PLATING & COLOR
G	LED	2	LED	
F	PCB	1	PCB	
E	Cover Spacer	1	PBT	BLACK COLOR
D	SHELL	1	SUS304	
C	OUTPUT CONTACT	10	BRASS (C5210)	Au PLTING
B	INTPUT CONTACT	10	BRASS (C2680)	TIN PLTING
A	HOUSING	1	PA6T	BLACK COLOR

UNLESS OTHERWISE SPECIFED TOLERANCES

Singatron Enterprise Co., Ltd.
信音企業股份有限公司

DECIMALS: X :±0.5, X.X :±0.3, X.XX :±0.2
ANGLES: X :±2°, X.X :±1°

TITLE	RJ45 1*1 w/ LED & Transformer		
DWN	AMYC 2009.04.23	PART NO.2TJ1523-000111	
CHKD	JOHNSON 2009.04.23	SCALE:N/A	UNIT: mm
APVD	JOHNSON 2009.04.23	SIZE: A3	SHEET:1 OF 1 REV: A

CUSTOMER COPY

SEE "TABLE 1"

PART NO.	Left LED		Right LED	
	-L3/+L4	+L3/-L4	-L1/+L2	+L1/-L2
2TJ1523-000111	YELLOW		GREEN	ORANGE

文件編號 RD-06-044-A