REV.	ECN NO OR DESCRIPTION	REVISED	DATE
A	PDR NO:T130219-5A	Sam	2013.07.18
B	ECN NO:S141129	ALLEN	2015.01.26

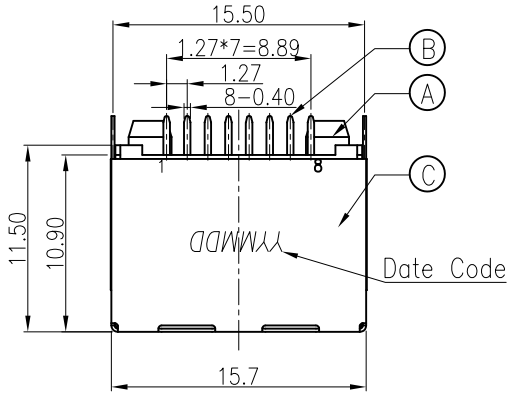

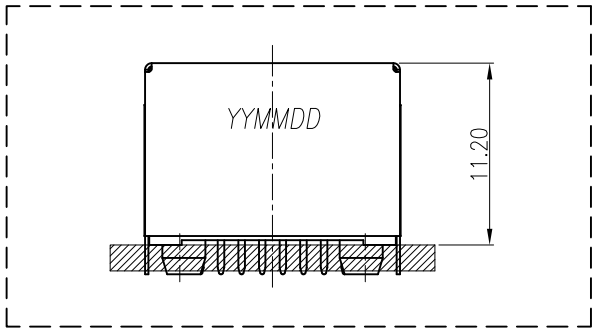

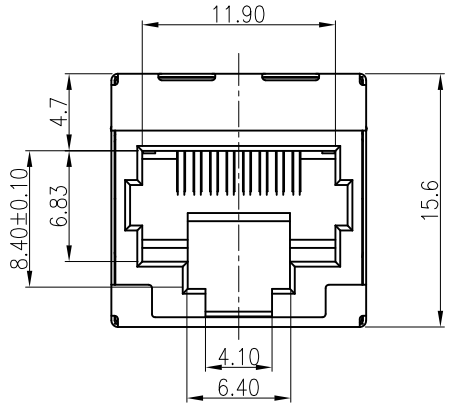

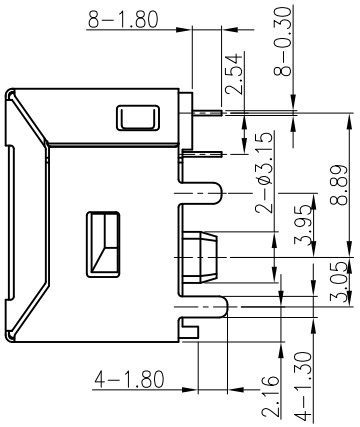

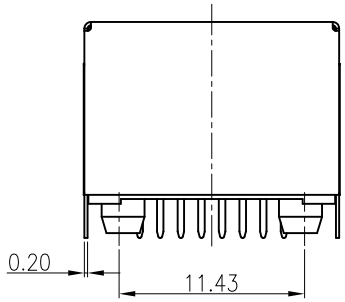

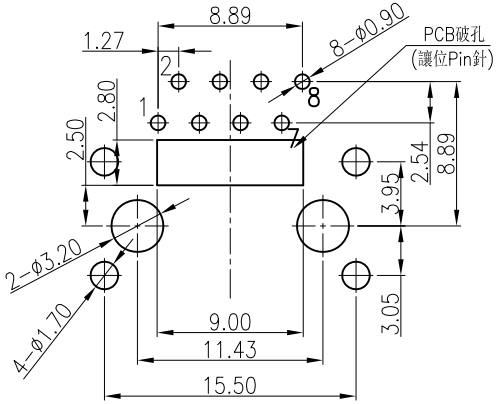

RECOMMENDED PCB LAYOUT
TOP VIEW ; TOL.±0.05
(PCB THICKNESS=1.60mm)

SPECIFICATIONS:

1. ELECTRICAL CHARACTERISTICS:
   1-1. CURRENT RATING: 1.5A MAX.
   1-2. VOLTAGE RATING: 150V MAX.
   1-3. CONTACT RESISTANCE : 50mΩ MAX.(INITIAL).
   100mΩ MAX.(AFTER LIFE TEST).
   1-4. INSULATION RESISTANCE : 100MΩ MIN.
2. MECHANICAL CHARACTERISTICS:
   2-1. DURABILITY: 10000 CYCLES.
   2-2. INSERTION FORCE: 2.25Kg MAX. WITH LATCH DEPRESSED.
   2-3. WITHDRAWAL FORCE: 4.5Kg MAX. WITH LATCH DEPRESSED.
   2-4. OPERATING TEMPERATURE: -30℃ ~ +70℃.
3. MARKING: MARK" " INSIDE OF THE CONNECTOR.
4. PACKAGING : TAPE & REEL.
5. TO CONFORM TO SINGATRON HAZARDOUS SUBSTANCE FREE SPEC.
6. HALOGEN FREE PRODUCT IDENTIFICATION
   MARK ON PRODUCT:
7. HALOGEN FREE PRODUCT IDENTIFICATION LOGO
   ON THE PACKAGING:
8. FOR REFLOW SOLDERING LEAD-FREE PROCESS.
9. PRINTED DATE CODE" YY MM DD " ON TOP OF THE CONNECTOR.
   - DD: DAY
   - MM: MONTH
   - YY: YEAR
10. Sumsung Part Number:3722-003787

NO	DESCRIPTION	QTY	MATERIAL	PLATING & COLOR

UNLESS OTHERWISE SPECIFED TOLERANCES

DECIMALS: X :±0.5, X.X :±0.3, X.XX :±0.2
ANGLES: X :±2°, X.X :±1°

Singatron Enterprise Co., Ltd.
信音企業股份有限公司

TITLE	RJ45 JACK		
DWN	ALLEN	PART NO. 2RJ3073-008211F	
CHKD	James	SCALE 4:1	UNIT: mm
APVD	BOYE	SIZE: A3	SHEET:1 / 2 REV: B

CUSTOMER COPY

文件編號 RD-06-043-A