REV.	ECN NO OR DESCRIPTION	REVISED	DATE
E	ECN NO:S190542-E	KIWIMAN	2019.07.11
F	ECN NO:S190828-R	KIWIMAN	2019.08.16

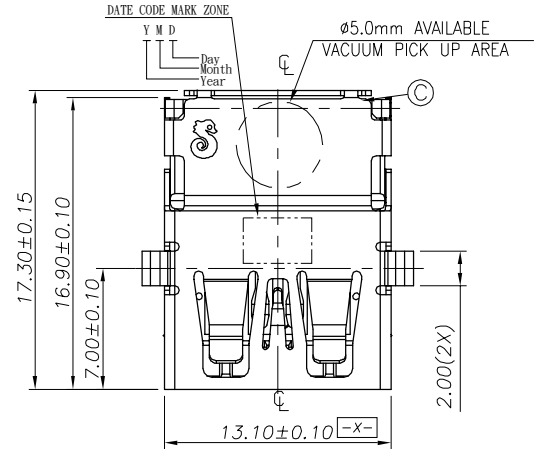

SPECIFICATIONS:

1. ELECTRICAL CHARACTERISTICS:
   - 1-1. CURRENT RATING: 1.8A (PIN1,4) ; OTHER CONTACTS 0.25A
   - 1-2. CONTACT RESISTANCE: 30mΩ MAX.
   - 1-3. DIELECTRIC WITHSTANDING VOLTAGE: 100V AC FOR 1 MINUTE
   - 1-4. INSULATION RESISTANCE: 100MΩ MIN
2. MECHANICAL CHARACTERISTICS:
   - 2-1. INSERTION FORCE : 2.5 Kgf MAX
   - 2-2. WITHDRAWAL FORCE : 1.0 Kgf MIN(INITIAL),0.8 Kgf(AFTER TEST)
3. DURABILITY: 5,000 CYCLES.
4. TO CONFORM TO SINGATRON HAZARDOUS SUBSTANCE FREE SPEC.
5. HALOGEN PRODUCT IDENTIFICATION MARK ON JACK: ◎
6. HALOGEN PRODUCT IDENTIFICATION LABEL ON PACKAGING:
7. FOR IR REFLOW PROCESS.
8. DATE : YMD-
9. PACKAGING : TAPE & REEL.

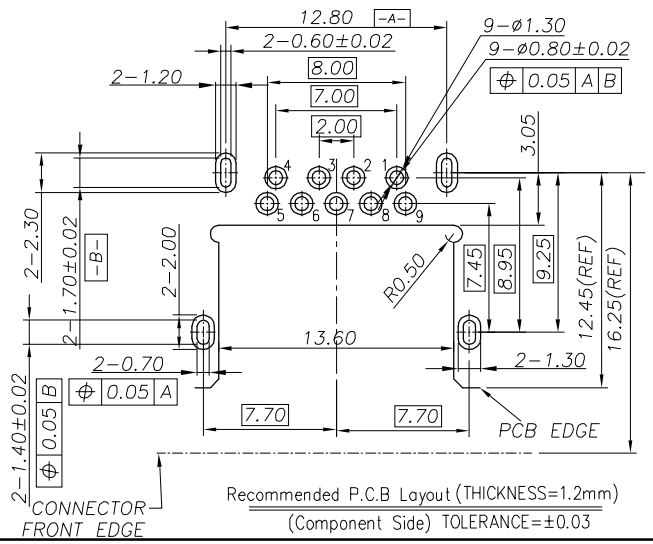

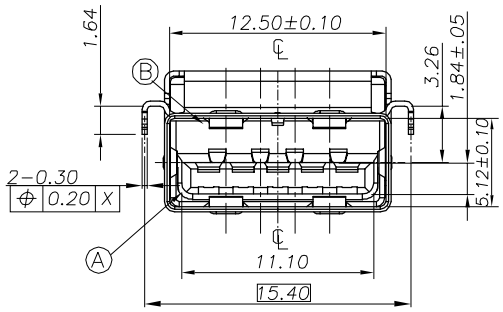

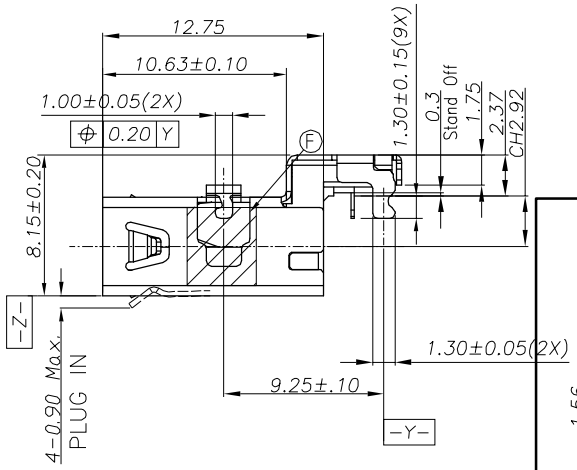

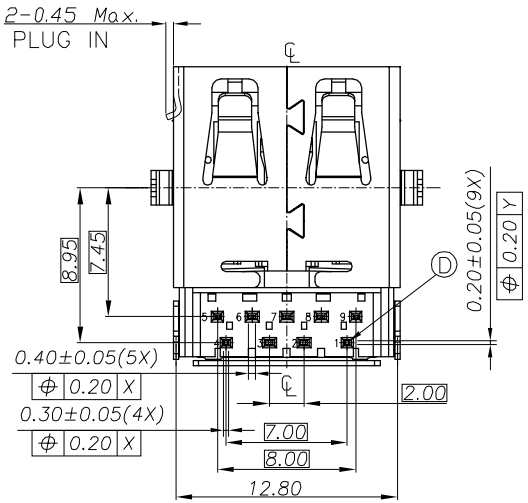

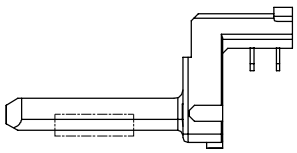

Housing 消除破孔结构

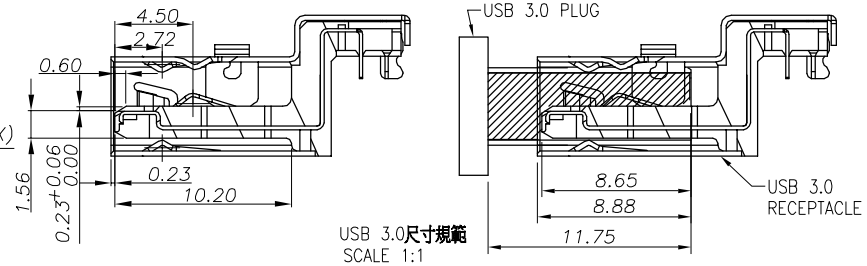

USB 3.0尺寸規範
SCALE 1:1

Pin	Signal NAME
1	VBUS
2	D-
3	D+
4	GND
5	StdA_SSRX-
6	StdA_SSRX+
7	GND_DRAIN
8	StdA_SSTX-
9	StdA_SSTX+

NO	DESCRIPTION	QTY	MATERIAL	PLATING & COLOR
F	MYLAR	2	4mm*4mm	YELLOW
D	9-TERMINAL	9	C5210 T=0.20	2uin AU+30uin PD/NI ON MATING AREA, MATTE Sn 120uin ON SOLDERING AREA, 80uin NICKEL UNDER PLATING OVERALL
C	SHELL	1	SUS304T 0.3	NICKEL 60u"MIN
B	BASE	1	PA9T UL94-V0	BLACK
A	HOUSING	1	PA9T UL94-V0	BLACK

UNLESS OTHERWISE SPECIFED TOLERANCES

DECIMALS: X :±0.5, X.X :±0.3, X.XX :±0.2

ANGLES: X :±2°, X.X :±1°

Singatron Enterprise Co., Ltd.
信音企業股份有限公司

TITLE	USB 3.0 REVERSE CONNECTOR		
DWN	KIWIMAN	PART NO.2UB4039-900801F	
CHKD		SCALE 1:1	UNIT: mm
APVD		SIZE: A3	SHEET:1 OF 1 REV: F

CUSTOMER COPY

文件編號:RD-06-043-A