REV.	ECN NO OR DESCRIPTION	REVISED	DATE
A	PDR NO:S140212-2A	Harlen	2014.8.2

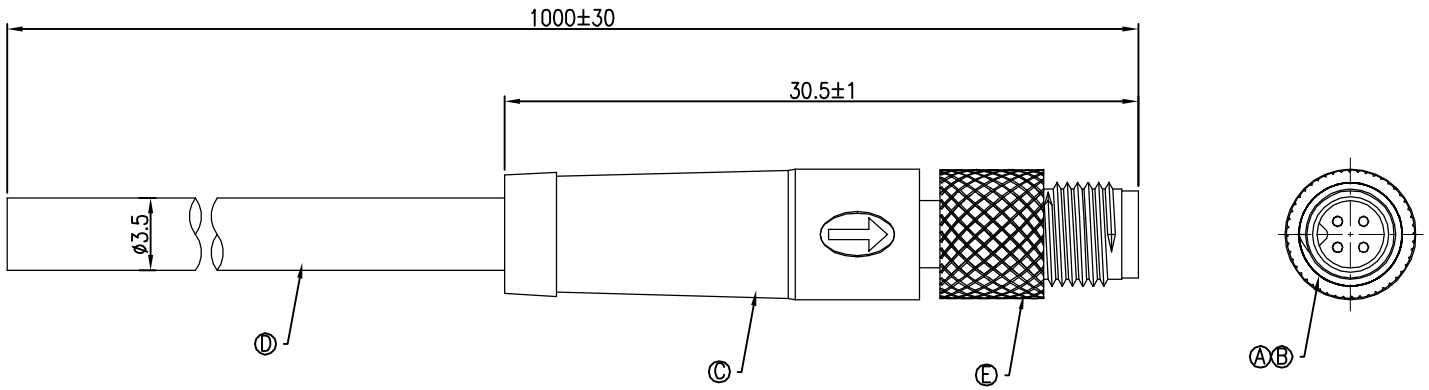

CONN.1

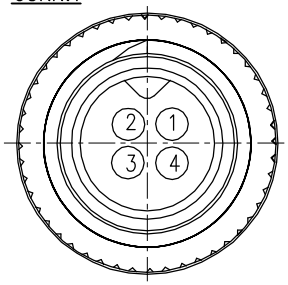

Pin Assignments
Front View

WIRE COLOR	CONN.
BLACK	4
BLUE	3
WHITE	2
BROWN	1

NOTES:
1 ELECTRICAL CHARACTERISTICS:
- 1-1 CURRENT RATING: 1 AMP.
- 1-2 CONTACT RESISTANCE: 30 mOhm Max.
- 1-3 INSULATION RESISTANCE: 100 MOhm Min. at 500VDC.
- 1-4 BREAKDOWN VOLTAGE: 500 VAC PER MINUTE.

2. MECHANICAL CHARACTERISTICS:
   - 2-1 TIGHTENING TORQUES: 0.8~1.0Nm(7.08~8.85lbf.in.).
3. ENVIRONMENTAL:
   - 3-1 OPERATING TEMPERATURE: -20°C TO +90°C.
   - 3-2 SEALING REQUIREMENTS: IP65.
4. OTHER GENERAL SPEC. TO REFER "M5 SENSOR CONNECTOR SERIES SPEC.".
5. FOR TECHNICAL DATA REFER TO YOUR LOCAL SINGATRON ELECTRONICS SALES OFFICE.
6. ALL DIMENSIONS ARE NOMINAL FOR REFERENCE ONLY UNLESS OTHERWISE STATED.
7. TO CONFORM TO SINGATRON HAZARDOUS SUBSTANCE FREE SPEC.
8. GREEN PRODUCT IDENTIFICATION LABEL ON PACKAGING: G.P. PASS .

NO	DESCRIPTION	QTY	MATERIAL	PLATING & COLOR
E	SCREW NUT	1	BRASS	NICKEL
D	CABLE	1	UL20549 26#*4C	BLACK
C	OVER MOLD	1	TPU	BLACK
B	MALE PIN	4	Phosphor Bronze	6u" Gold Plating Over Nickel Plating
A	BODY	1	PA66	BLACK(PUR JACKET)

UNLESS OTHERWISE SPECIFED TOLERANCES

DECIMALS: X :±0.5, X.X :±0.3, X.XX :±0.2
ANGLES: X :±2°, X.X :±1°

Singatron Enterprise Co., Ltd.
信音企業股份有限公司

TITLE	M5 4PIN MALE CONNECTOR WIRE HARNESS			
DWN	Harlen	PART NO.2MN3012-W04200H		
CHKD	JF	SCALE 4:1	UNIT: mm	
APVD	Quan	SIZE: A3	SHEET:1 OF 1	REV: A

CUSTOMER COPY

文件編號:RD-06-043-A