REV.	ECN NO OR DESCRIPTION	REVISED	DATE
A	PDR NO:S160128-2B	Vicky	2016.03.17

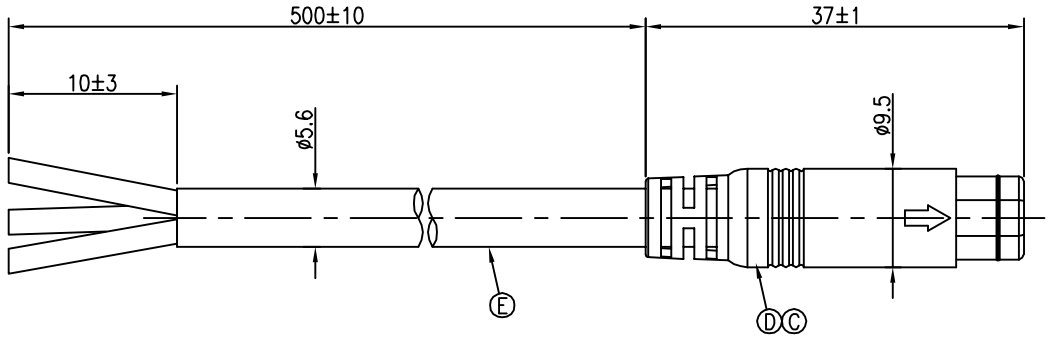

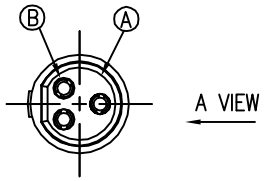

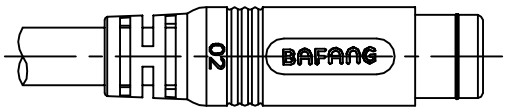

A VIEW

3	GREEN
2	BLUE
1	YELLOW
CONN.	WIRE COLOR

PIN OUT

CONN.

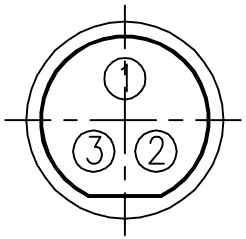

Pin Assignments
Front View

NOTES:
1. WATERPROOF RATE: IP65
2. CURRENT RATING: 15A
3. CONTACT RESISTANCE: 3 Ohm Max.
4. HI-POT TEST 800V AC, 5mA(1SEC)
5. INSULATION RESISTANCE: 30Mohm MIN. BY 500V DC
6. SPECIFICATIONS:SEE "E-BIKE SERIES SPECIFICATIONS".
7. TO CONFORM TO THE SINGATRON HAZARDOUS SUBSTANCE FREE SPEC.
8. GREEN PRODUCT IDENTIFICATION LABEL ON PACKAGING: G.P. PASS

NO	DESCRIPTION	QTY	MATERIAL	PLATING & COLOR
E	CABLE	1	16AWG*3C OD5.6	BLACK(PVC JACKET)
D	OVER MOLD	1	TPU	BLACK
C	INNER MOLD	1	PVC	NATURAL
B	FEMALE PIN	3	Phosphor Bronze	1~3u" GOLD PLATING OVER NICKEL PLATING
A	BODY	1	PA66+GF	BLACK

UNLESS OTHERWISE SPECIFED TOLERANCES

DECIMALS: X :±0.5, X.X :±0.3, X.XX :±0.2
ANGLES: X :±2°, X.X :±1°

Singatron Enterprise Co., Ltd.
信音企業股份有限公司

TITLE	E-BIKE SERIES 180° 3 PIN FEMALE CONN.		
DWN	Vicky	PART NO.2EB3004-W034A0H	
CHKD	JF	SCALE 2:1	UNIT: mm
APVD	Steve	SIZE: A3	SHEET:1 OF 1

REV: A

CUSTOMER COPY

文件編號RD-06-043-A