REV	ECN NO. OR DESCRIPTION	REVISED	DATE
A	PDR NO.:S140331-10A	Harlen	2014.08.03
B	ECN NO.:S202101-R23	MF	2021.03.03
C	ECN NO.:S202406-C07	LEI	2025.01.16

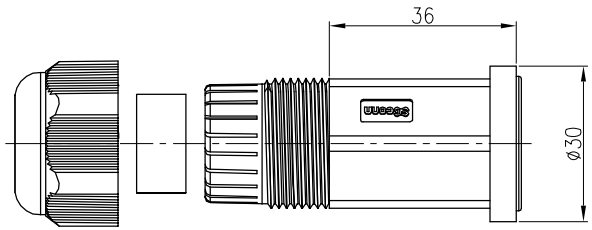

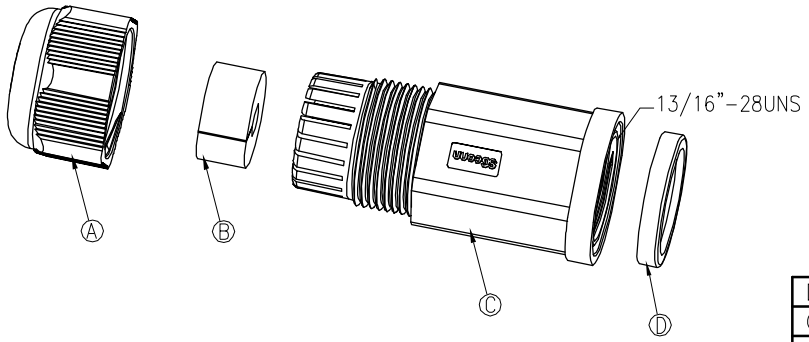

NOTES:
1. WATERPROOF GRADE: IP67(WHEN PROPERLY MATED)
2. TEMPERATURE RANGE: -30°C~115°C
3. TO CONFORM TO THE SINGATRON HAZARDOUS SUBSTANCE FREE SPEC.
4. GREEN PRODUCT IDENTIFICATION LABEL ON PACKAGING: G.F. PASS
5. SEAL FOR CABLE OD:ø5.0mm~ø6.3mm

NO.	DESCRIPTION	QT'Y	MATERIAL	PLATING & COLOR
D	GASKET	1	SILICONE	BLACK
C	CLAMP RING	1	PC UL94V-0	BLACK
B	SEAL	1	SILICONE	BLACK
A	SEALING NUT	1	PC UL94V-0	BLACK

UNLESS OTHERWISE SPECIFED TOLERANCES

DECIMALS: X :±0.5, X.X :±0.3, X.XX :±0.2
ANGLES: X :±2°, X.X :±1°

Suzhou Singatron Auto Electronics Co.,Ltd.
蘇州信音汽車電子有限公司

TITLE	WATERPROOF RJ45 PLUG ASSEMBLY M25*1.5			
DWN	LEI	PART NO.	2TJ3001-W05111H	
CHKD	JY	SCALE 1:1	UNIT: mm	
APVD	JUN	SIZE: A3	SHEET:1 OF 1	REV: C

CUSTOMER COPY

File No:RD-06-043-A