REV.	ECN NO OR DESCRIPTION	REVISED	DATE
A	PDR NO.:T090522-3C	Steve	2009.07.28
B	ECN NO.:S160517-C	Vicky	2016.05.16
C	ECN NO.:S202405-R01	LEI	2024.07.29

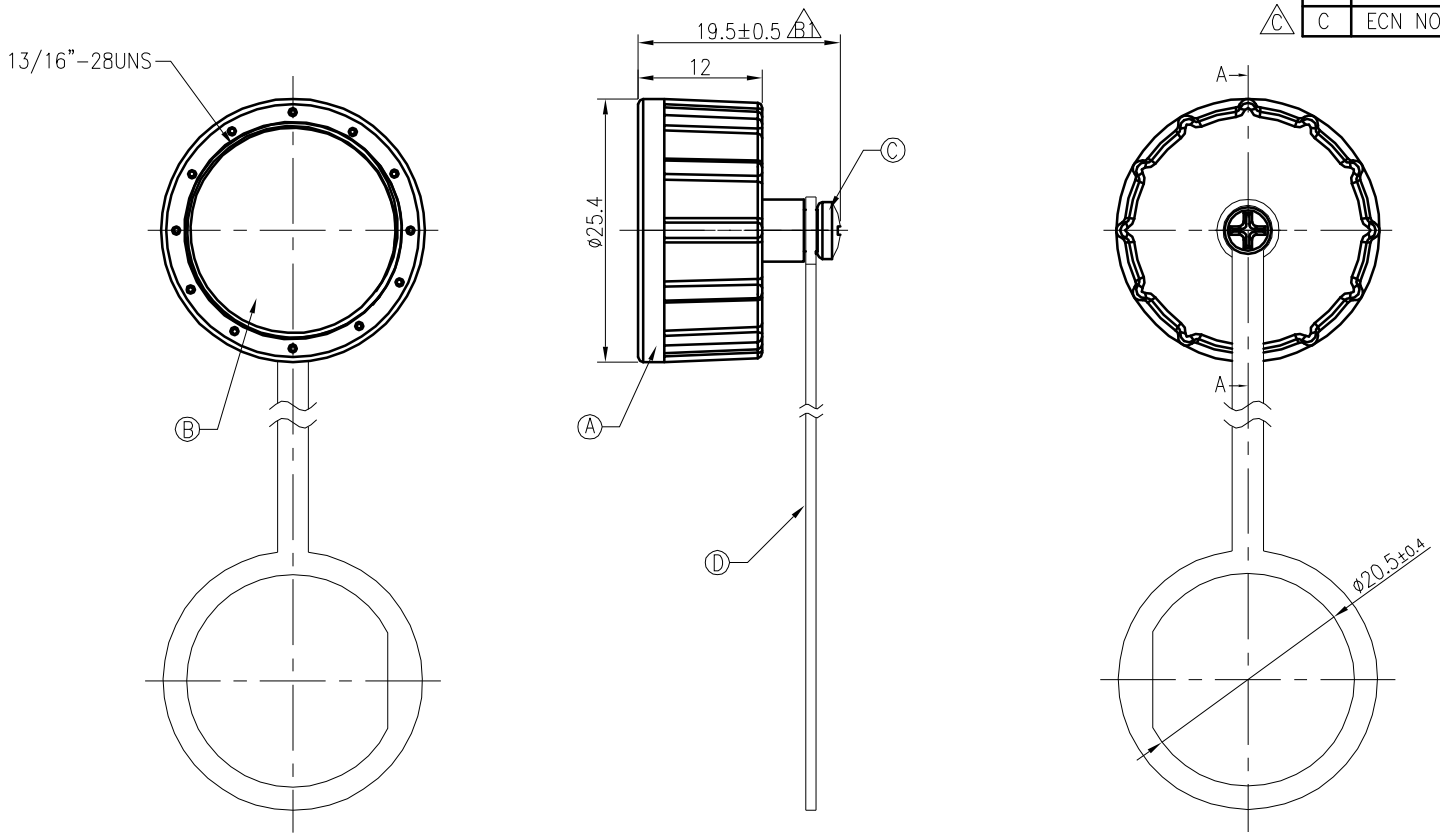

NOTES:
1. WATERPROOF FRADE OF PROTECTION: IP67
   IP67: IMMERSED IN 1M WATER FOR 30 MINUTES
2. TO CONFORM TO SINGATRON HAZARDOUS SUBSTANCE FREE SPEC.
3. GREEN PRODUCT IDENTIFICATION LABEL ON PACKAGING: G.P. PASS
4. FOR PANEL THICKNESS Max. OF 2.8mm

NO	DESCRIPTION	QTY	MATERIAL	PLATING & COLOR
D	CHAIN	1	TPU	BLACK
C	SCREW	1	STAINLESS STEEL	N/A
B	GASKET	1	EPDM	BLACK
A	SCREW NUT	1	PPE	BLACK

UNLESS OTHERWISE SPECIFED TOLERANCES

DECIMALS: X :±0.50, X.X :±0.30, X.XX :±0.20
ANGLES: X :±1°, X.X :±0.5°

Suzhou Singatron Auto Electronics CO.,LTD.
蘇州信音汽車電子有限公司

TITLE	WATERPROOF CAP SCREW TYPE (IP67)			
DWN	LEI	PART NO.2UB3001-W0000W		
CHKD	Jun	SCALE 2:1	UNIT: mm	
APVD	JF	SIZE: A3	SHEET:1 OF 1	REV: C

CUSTOMER COPY

文件編號: RD-06-043-A