REV.	ECN NO OR DESCRIPTION	REVISED	DATE
A	PDR NO.:A210428-1A	MF	2021.12.14

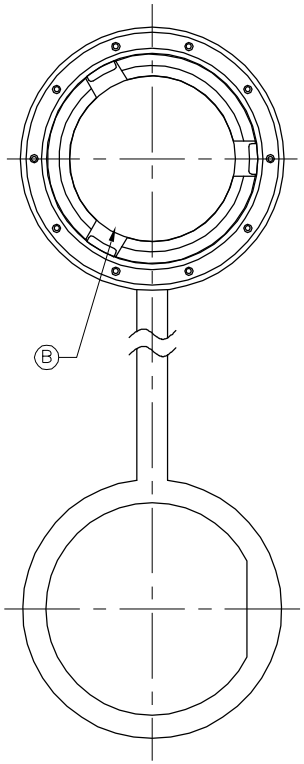

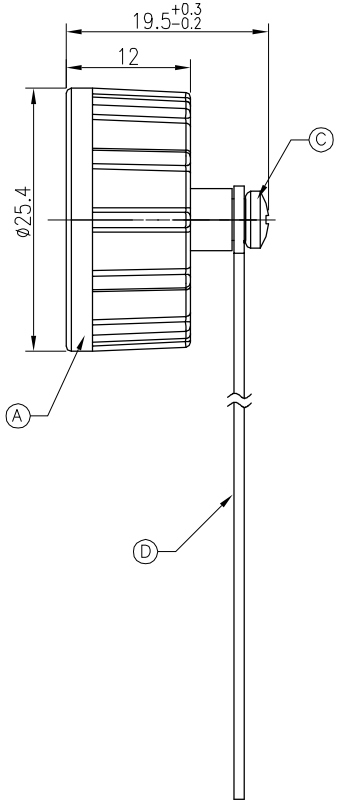

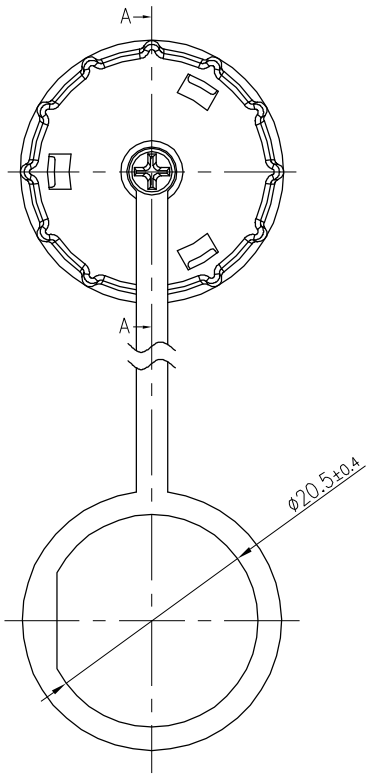

NOTES:
1. WATERPROOF RATE: IP67
   IP67: IMMERSED IN 1M WATER FOR 30 MINUTES
2. TO CONFORM TO SINGATRON HAZARDOUS SUBSTANCE FREE SPEC.
3. GREEN PRODUCT IDENTIFICATION LABEL ON PACKAGING: G.P. PASS
4. FOR PANEL THICKNESS MAX OF 2.8mm

NO	DESCRIPTION	QTY	MATERIAL	PLATING & COLOR
D	CHAIN	1	TPU	BLACK
C	SCREW	1	STAINLESS STEEL	N/A
B	GASKET	1	SILICONE	BLACK
A	SCREW CAP	1	PA66+GF	BLACK

UNLESS OTHERWISE SPECIFED TOLERANCES

DECIMALS: ANGLES:
X :±0.50 X :±1°
X.X :±0.30 X.X :±0.5°
X.XX :±0.20

Suzhou Singatron Auto Electronics CO.,LTD.
蘇州信音汽車電子有限公司

TITLE	WATERPROOF CAP SCREW TYPE (IP67)			
DWN	MF	PART NO.2UB3001-W0009WH		
CHKD	JF	SCALE 2:1	UNIT: mm	
APVD	JF	SIZE: A3	SHEET:1 OF 1	REV: A

CUSTOMER COPY

文件編號 RD-06-043-A