REV.	ECN NO OR DESCRIPTION	REVISED	DATE
A	PDR NO.:T090522-4A	Steve	2009.07.28
B	ECR:S091219	joe-liao	2009.12.17
C	ECN:S171258-R (C)	Yang	2017.12.28

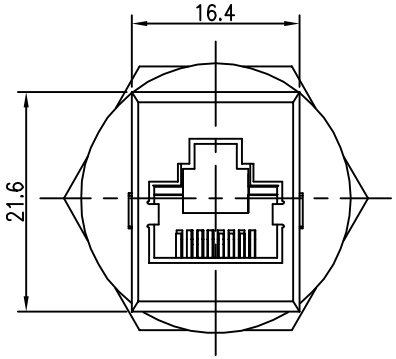

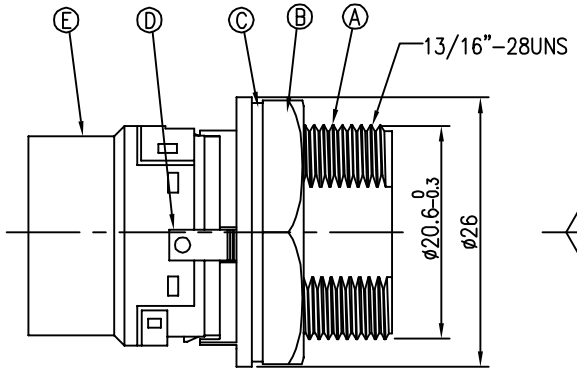

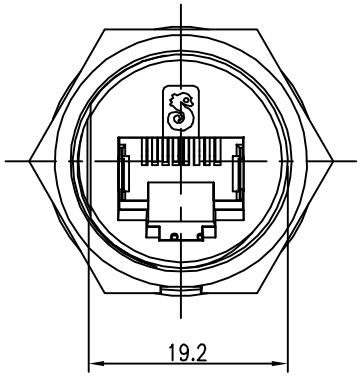

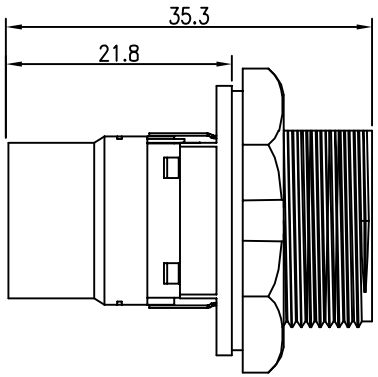

NOTES:
1. WATERPROOF RATE: IP67(WHEN PROPERLY MATED)
   IP67: IMMERSED IN 1M WATER FOR 30 MINUTES
2. ELECTRICAL CHARACTERISTICS:
   1-1. RATING:125V 1.5A
   1-2. CONTACT RESISTANCE: 100mΩ MAX.(INITIAL)
   1-3. DIELECTRIC WITHSTANDING VOLTAGE: 500V AC FOR ONE MINUTE
   1-4. INSULATION RESISTANCE: 100MΩ MIN. MEASURED BY 500 VDC
3. OTHER GENERAL SPEC. TO REFER "RJ45 SERIES SPEC".
4. TO CONFORM TO SINGATRON HAZARDOUS SUBSTANCE FREE SPEC.
5. GREEN PRODUCT IDENTIFICATION LABEL ON PACKAGING: G.P. PASS
6. FOR PANEL THICKNESS MAX OF 3.5mm

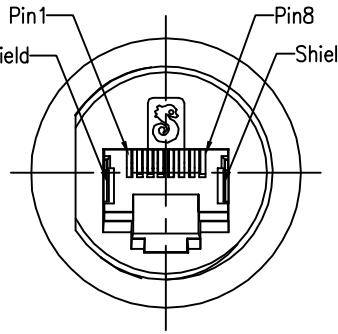

PIN ASSIGNMENTS
FRONT VIEW

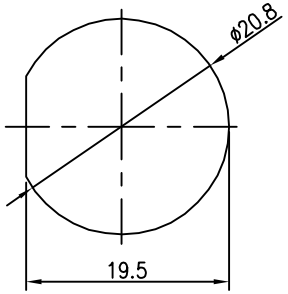

RECOMMENDED PANEL CUT-OUT

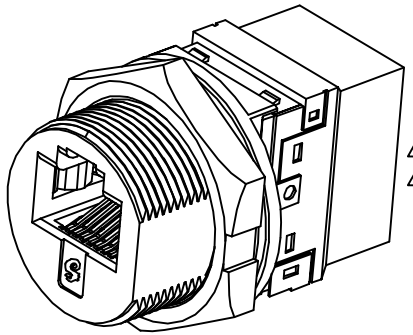

NO	DESCRIPTION	QTY	MATERIAL	PLATING & COLOR
E	RJ45 JACK	1	CAT5E STP	N/A
D	GROUND	2	C5210-EH, T=0.25mm	NICKEL PLATING 60u"
C	GASKET	1	EPDM	BLACK
B	SCREW NUT	1	PA66+GF	BLACK
A	HOUSING	1	PC	BLACK

UNLESS OTHERWISE SPECIFED TOLERANCES

DECIMALS: X :±0.5, X.X :±0.3, X.XX :±0.2
ANGLES: X :±2°, X.X :±1°

Singatron Enterprise Co., Ltd.
信音企業股份有限公司

TITLE	WATERPROOF RJ45 CAT.5E STP JACK		
DWN	Yang	PART NO.2TJ3003-W05100	
CHKD	JF	SCALE 2:1	UNIT: mm
APVD	Steve	SIZE: A3	SHEET:1 OF 1 REV:C

CUSTOMER COPY

文件編號:RD-06-043-A