REV.	ECN NO OR DESCRIPTION	REVISED	DATE
A	PDR NO.:T191230-2A~C	JY	2020.03.20
B	ECN NO.:S202211-R09	MF	2022.11.15

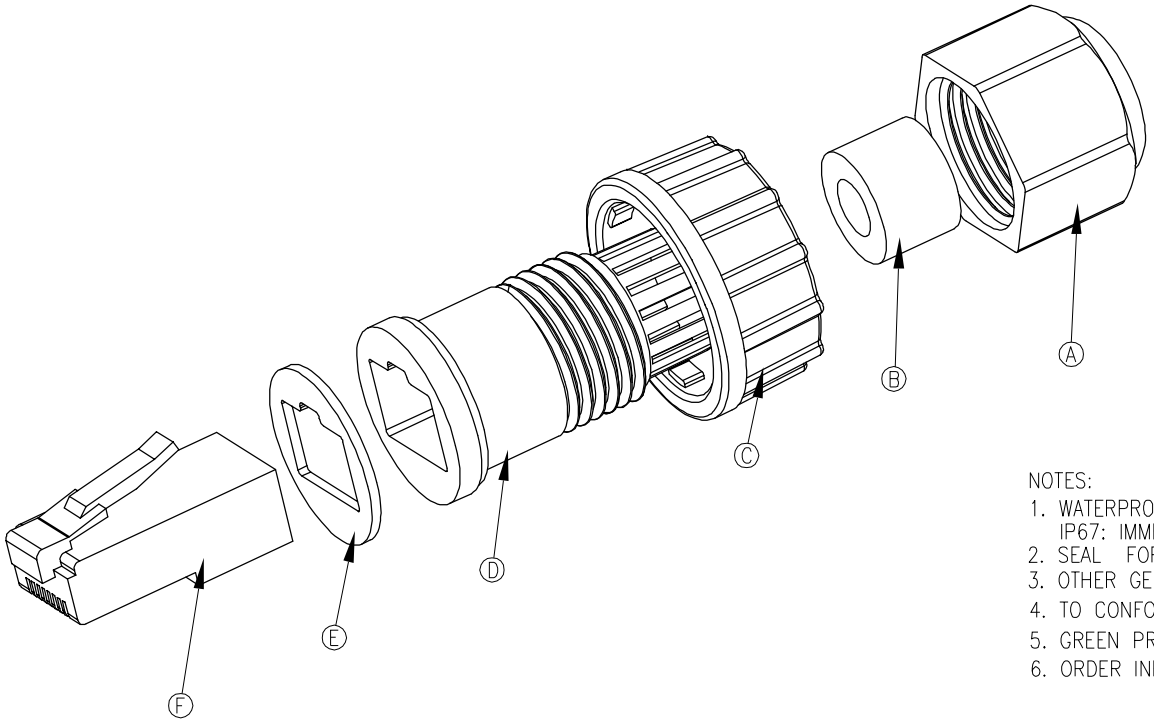

NOTES:
1. WATERPROOF RATE: IP67(WHEN PROPERLY MATED)
   IP67: IMMERSED IN 1M WATER FOR 30 MINUTES
2. SEAL FOR CABLE OD:ø3.5mm~ø5.5mm
3. OTHER GENERAL SPEC. TO REFER "RJ45 SERIES SPEC".
4. TO CONFORM TO SINGATRON HAZARDOUS SUBSTANCE FREE SPEC.
5. GREEN PRODUCT IDENTIFICATION LABEL ON PACKAGING: G.P. PASS
6. ORDER INFORMATION: 2TJ301X-W05100H
   - 6-WITH STP PLUG
   - 7-WITH UTP PLUG
   - 8-WITHOUT PLUG

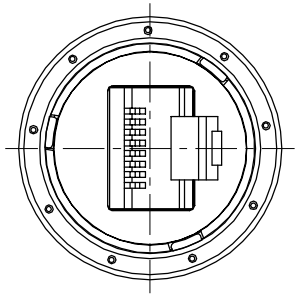

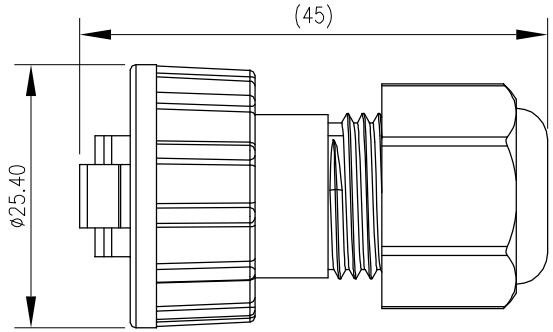

NO	DESCRIPTION	QTY	MATERIAL	PLATING & COLOR
F	RJ45 PLUG	1	SEE NOTE 6	N/A
E	GASKET	1	SILICONE	BLACK
D	CLAMP RING	1	PA66	BLACK
C	LOCK NUT	1	PA66	BLACK
B	SEAL	1	EPDM	BLACK
A	SEALING NUT	1	PA66	BLACK

UNLESS OTHERWISE SPECIFED TOLERANCES

DECIMALS: X :±0.5, X.X :±0.3, X.XX :±0.2
ANGLES: X :±2°, X.X :±1°

Suzhou Singatron Auto Electronics CO.,LTD.
蘇州信音汽車電子有限公司

TITLE	WATERPROOF RJ45 PLUG			
DWN	MF	PART NO.2TJ301X-W05100H		
CHKD	JF	SCALE 1:1	UNIT: mm	
APVD	Steve	SIZE: A3	SHEET:1 OF 1	REV: B

CUSTOMER COPY

文件編號:RD-06-043-A