REV.	ECN NO OR DESCRIPTION	REVISED	DATE
A	PDR NO.:T191220-3A	JF	2022.05.11
B	ECN NO.:S202206-R08	MF	2022.06.13
C	ECN NO.:S202403-C18	Elrod	2024.05.22
D	ECN NO.:S202407-C07	MF	2024.07.18

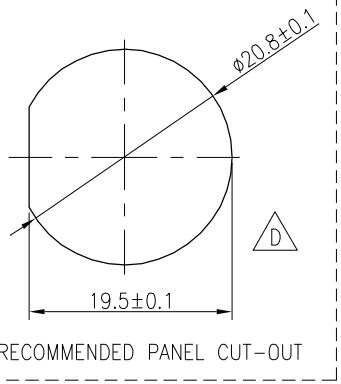

RECOMMENDED PANEL CUT-OUT

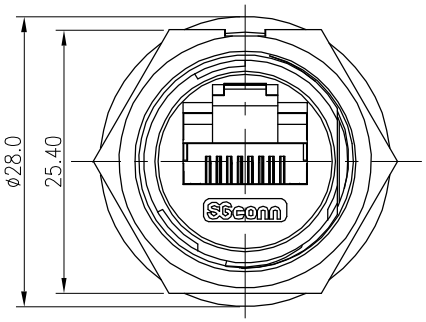

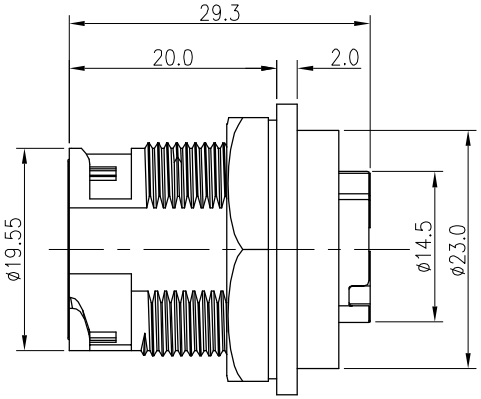

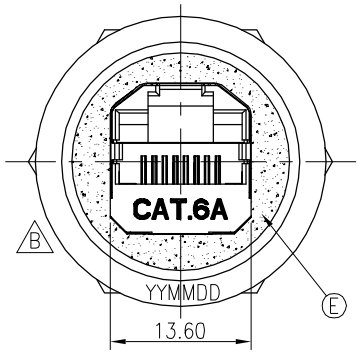

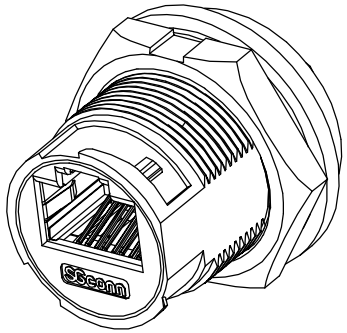

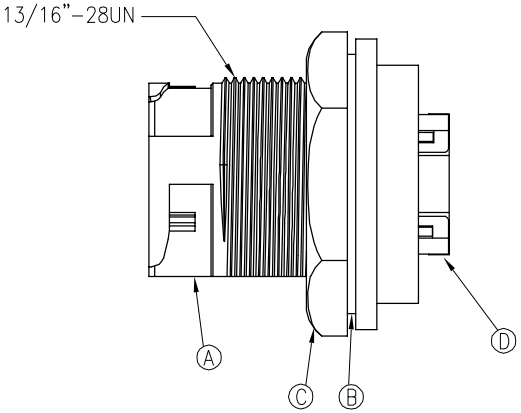

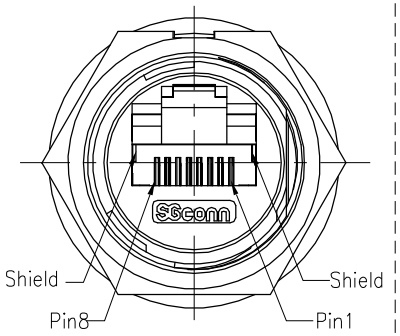

PIN ASSIGNMENTS
FRONT VIEW

NOTES:
1. WATERPROOF GRADE OF PROTECTION: IP67(WHEN PROPERLY MATED)
   IP67: IMMERSED IN 1M WATER FOR 30 MINUTES
2. RATING: 125V 1.5A
3. OTHER GENERAL SPEC. TO REFER "RJ45 SERIES SPEC."
4. TO CONFORM TO SINGATRON HAZARDOUS SUBSTANCE FREE SPEC.
5. GREEN PRODUCT IDENTIFICATION LABEL ON PACKAGING: G.P. PASS
6. FOR PANEL THICKNESS: 7.0mm Max.
7. LASER PRINTING DATE CODE "YYMMDD"
   - YY: YEAR
   - MM: MONTH
   - DD: DAY

NO	DESCRIPTION	QTY	MATERIAL	PLATING & COLOR
E	GLUE	1	N/A	BLACK
D	RJ45 JACK	1	CAT6A STP UL94V-0	N/A
C	SCREW NUT	1	PA66+GF UL94V-0	BLACK
B	GASKET	1	SILIONE UL94 HB	BLACK
A	BODY	1	PA66+GF UL94V-0	BLACK

UNLESS OTHERWISE SPECIFED TOLERANCES

DECIMALS: X :±0.5, X.X :±0.3, X.XX :±0.2
ANGLES: X :±2°, X.X :±1°

Suzhou Singatron Auto Electronics CO.,LTD.
蘇州信音汽車電子有限公司

TITLE	WATERPROOF RJ45 CAT.6A STP JACK		
DWN	MF	PART NO.2TJ3020-W05100H	
CHKD	JAY	SCALE 2:1	UNIT: mm
APVD	JF	SIZE: A3	SHEET:1 OF 1

REV: D

CUSTOMER COPY

文件編號 RD-06-043-A