REV.	ECN NO OR DESCRIPTION	REVISED	DATE
A	PDR NO:T230801-3A	JAY	2025.01.01

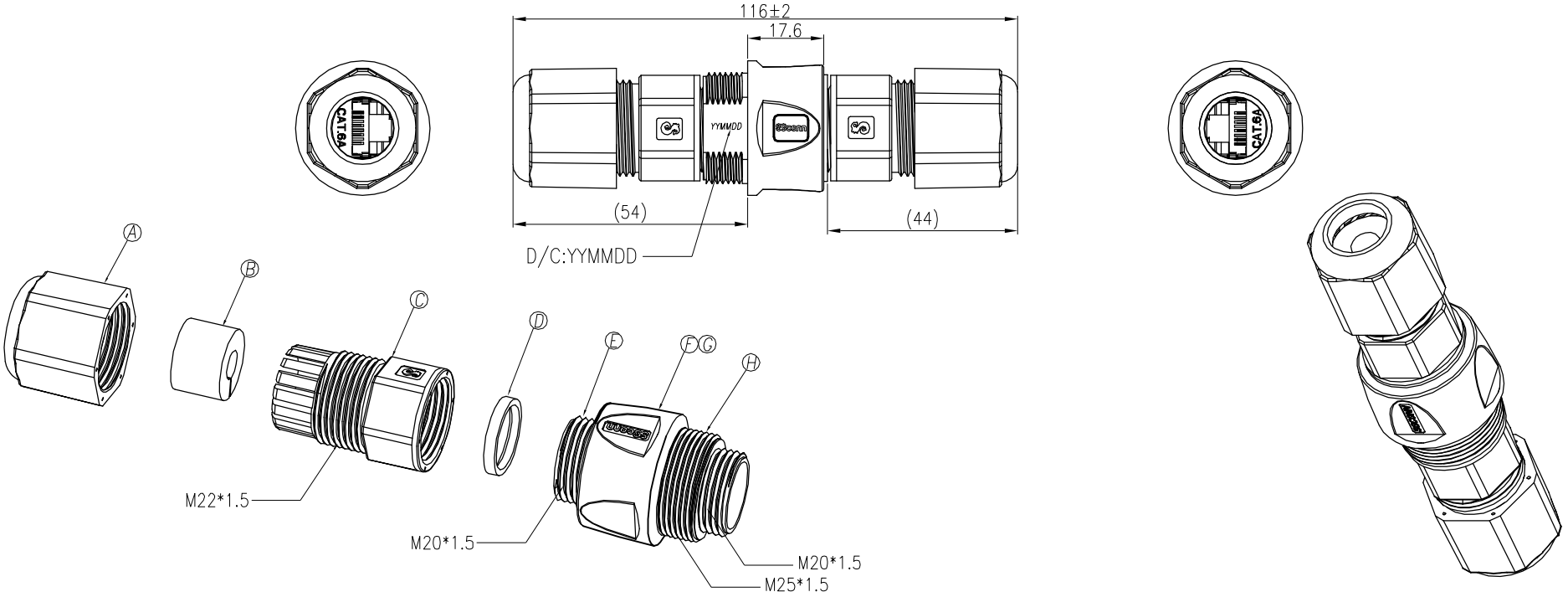

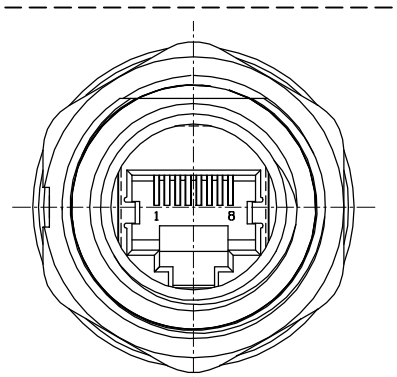

PIN ASSIGNMENTS
FRONT VIEW

NOTES:
1. WATERPROOF RATE: IP67
   IP67: IMMERSED IN 1M WATER FOR 30 MINUTES
2. RATING:125V 1.5A
3. OTHER GENERAL SPEC. TO REFER "RJ45 SERIES SPEC".
4. TO CONFORM TO SINGATRON HAZARDOUS SUBSTANCE FREE SPEC.
5. GREEN PRODUCT IDENTIFICATION LABEL ON PACKAGING: G.P. PASS
6. SEAL-1 ID ø7.1mm FOR CABLE: OD ø5.0mm~ø7.0mm
7. Torque Force: 1.0 ~1.2 Nm
8. TEMPERATURE RANGE: -40°C To +105°C
9. LASE DATE CODE "YYMMDD"
   DATE CODE: YYMMDD
   - DAY
   - MONTH
   - YEAR

NO	DESCRIPTION	QTY	MATERIAL	PLATING & COLOR
H	HOUSING	1	PC	BLACK
G	RJ45 JACK	1	CAT6A STP	N/A
F	OVER MOLD	1	PVC	BLACK
E	HOUSING	1	PC	BLACK
D	GASKET	2	SILICONE	BLACK
C	CLAMP RING	2	PC	BLACK
B	SEAL 1	2	SILICONE	BLACK
A	SEALING NUT	2	PC	BLACK

UNLESS OTHERWISE SPECIFED TOLERANCES

DECIMALS: X :±0.5, X.X :±0.3, X.XX :±0.2
ANGLES: X :±2°, X.X :±1°

Suzhou Singatron Auto Electronics CO.,LTD.
蘇州信音汽車電子有限公司

TITLE	WATERPROOF RJ45 COUPLER CAT.6A STP			
DWN	JAY	PART NO.2TJ3020-W05102H		
CHKD	MF	SCALE 2:1	UNIT: mm	
APVD	JF	SIZE: A3	SHEET:1 OF 1	REV: A

CUSTOMER COPY

文件編號: RD-06-043-A